ARCHITECTURE/ENGINEERING:
LONG & ASSOCIATES
ARCHITECTS / ENGINEERS, INC.
4525 S. MANHATTAN AVE.
TAMPA, FLORIDA 33611
AAC001624
1828
CGC1511025

HILLSBOROUGH COUNTY SHERIFF'S OFFICE

PINEBROOKE BUILDING 4 INTERIOR RENOVATION

1220 - 1238 TECH BLVD.
TAMPA, FL 33619

HILLSBOROUGH COUNTY SHERIFF'S OFFICE
CHAD CHRONISTER, SHERIFF

CODE COMPLIANCE:

TO THE BEST OF THE ARCHITECT'S AND/OR ENGINEER'S KNOWLEDGE, THESE PLANS AND SPECIFICATIONS COMPLY WITH THE APPLICABLE MINIMUM BUILDING CODES AND THE APPLICABLE FIRE-SAFETY STANDARDS.

NOTE #1 THE FLORIDA BUILDING CODE 6TH EDITION (2017) WENT INTO EFFECT ON MONDAY, JANUARY 1, 2018.

100% CONSTRUCTION DRAWINGS | L&A PROJECT NO. 19002 | SEPTEMBER 20, 2019

INDEX OF DRAWINGS

GENERAL INDEX - CKR

- CHRISTOPHER K. RAWLINS, STATE OF FLORIDA, REGISTERED ARCHITECT, LICENSE NO. AR100384 IS RESPONSIBLE FOR ALL SHEETS APPEARING ON THE COVER SHEET UNDER THE GENERAL HEADING
- G0.1 COVER SHEET
- G0.2 ABBREVIATIONS, SYMBOL LEGEND, & MATERIALS LEGEND
- G0.3 UL-RATED PIPE PENETRATION DETAILS
- G0.4 INTERIOR PARTITIONS AND FIRE EXTINGUISHER CABINET DETAILS

ARCHITECTURAL INDEX - CKR

- CHRISTOPHER K. RAWLINS, STATE OF FLORIDA, REGISTERED ARCHITECT, LICENSE NO. AR100384 IS RESPONSIBLE FOR ALL SHEETS APPEARING ON THE COVER SHEET UNDER THE ARCHITECTURAL HEADING
- LS1.1 LIFE SAFETY PLANS & CODE ANALYSIS NOTES
- DA0.1 OVERALL DEMOLITION FLOOR PLAN
- DA0.2 ENLARGED DEMOLITION FLOOR PLAN
- DA0.3 ENLARGED DEMOLITION FLOOR PLAN
- A0.1 OVERALL WORK AREA FLOOR PLAN
- A0.2 PARTIAL ENLARGED FLOOR PLAN
- A0.3 PARTIAL ENLARGED FLOOR PLAN
- A1.2 PARTIAL ENLARGED FURNITURE PLAN
- A1.3 PARTIAL ENLARGED FURNITURE PLAN
- A3.2 PARTIAL ENLARGED REFLECTED CEILING PLAN
- A3.3 PARTIAL ENLARGED REFLECTED CEILING PLAN
- A4.1 OVERALL ROOF PLAN
- A5.1 BUILDING SECTIONS
- A6.1 DETAILS
- A6.2 DETAILS
- A7.1 ENLARGED PLANS
- A7.2 CASEWORK ELEVATIONS
- A7.3 CASEWORK ELEVATIONS
- A7.4 CASE WORK SECTIONS
- A8.1 DOOR SCHEDULE, DOOR & WINDOW TYPES
- A8.2 ROOM FINISH SCHEDULE
- A8.3 DOOR & WINDOW DETAILS

STRUCTURAL INDEX - PEW

- PAUL E. WIECZOREK, STATE OF FLORIDA, PROFESSIONAL ENGINEER, LICENSE NO. PE 52804 IS RESPONSIBLE FOR ALL SHEETS APPEARING ON THE COVER SHEET UNDER THE STRUCTURAL HEADING
- S1.1 OVERALL SLAB PLAN
- S1.2 PARTIAL SLAB PLAN
- S2.1 OVERALL ROOF FRAMING PLAN
- S3.1 STRUCTURAL NOTES & DETAILS
- S3.2 SECTION & DETAILS
- S3.3 SECTIONS & DETAILS

MECHANICAL INDEX - WEB

- WILLIAM E. BROWN, STATE OF FLORIDA, PROFESSIONAL ENGINEER, LICENSE NO. PE 57975 IS RESPONSIBLE FOR ALL SHEETS APPEARING ON THE COVER SHEET UNDER THE MECHANICAL HEADING
- DM1.1 PARTIAL MECH DEMOLITION PLAN
- DM1.2 PARTIAL MECH DEMOLITION RIGHT
- M0.1 LEGEND & GENERAL NOTES
- M1.1 PARTIAL MECH HVAC PLAN
- M1.2 PARTIAL MECH HVAC PLAN
- M2.1 OVERALL MECH ROOF PLAN
- M3.1 DETAILS
- M4.1 SCHEDULES

PLUMBING INDEX - WEB

- WILLIAM E. BROWN, STATE OF FLORIDA, PROFESSIONAL ENGINEER, LICENSE NO. PE 57975 IS RESPONSIBLE FOR ALL SHEETS APPEARING ON THE COVER SHEET UNDER THE PLUMBING HEADING
- DP1.1 PARTIAL PLUMB DEMOLITION PLAN
- DP1.2 PARTIAL PLUMB DEMOLITION PALN
- P0.1 GENERAL NOTES & LEGEND
- P1.1 PARTIAL PLUMB PLAN
- P1.2 PARTIAL PLUMB PLAN
- P3.1 DETAILS
- P3.2 SCHEDULES
- P4.1 PARTIAL DOMESTIC RISER DIAGRAM
- P4.2 PARTIAL DOMESTIC RISER DIAGRAM
- P4.3 PARTIAL DOMESTIC RISER DIAGRAM
- P4.4 PARTIAL DOMESTIC RISER DIAGRAM
- P4.5 PARTIAL SANITARY RISER DIAGRAM
- P4.6 PARTIAL SANITARY RISER DIAGRAM
- P4.7 PARTIAL SANITARY RISER DIAGRAM

ELECTRICAL INDEX - RAR

- ROBERT A. RACE II, STATE OF FLORIDA, PROFESSIONAL ENGINEER, LICENSE NO. PE 0051483 IS RESPONSIBLE FOR ALL SHEETS APPEARING ON THE COVER SHEET UNDER THE ELECTRICAL HEADING
- DE3.1 PARTIAL ELECTRICAL DEMOLITION PLAN
- DE3.2 PARTIAL ELECTRICAL DEMOLITION PLAN
- E0.1 LEGEND, GENERAL NOTES & DETAILS
- E2.1 PARTIAL LIGHTING PLAN
- E2.2 PARTIAL LIGHTING PLAN
- E3.1 PARTIAL POWER & SIGNAL PLAN
- E3.2 PARTIAL POWER & SIGNAL PLAN
- E3.3 OVERALL ROOF ELECTRICAL PLAN
- E3.4 PARTIAL TELECOM PLAN
- E3.5 PARTIAL TELECOM PLAN
- E3.6 PARTIAL SECURITY PLAN
- E3.7 PARTIAL SECURITY PLAN
- E5.1 SIGNAL SYSTEMS RISERS
- E6.1 ELECTRICAL RISERS
- E6.2 PANELBOARD SCHEDULES
- E6.3 PANELBOARD SCHEDULES
- E6.4 SWITCHBOARD ELEVATION AND SCHEDULE
- E7.1 DETAILS
- E7.2 DETAILS
- E7.3 DETAILS
- E7.4 DETAILS
- E7.5 DETAILS

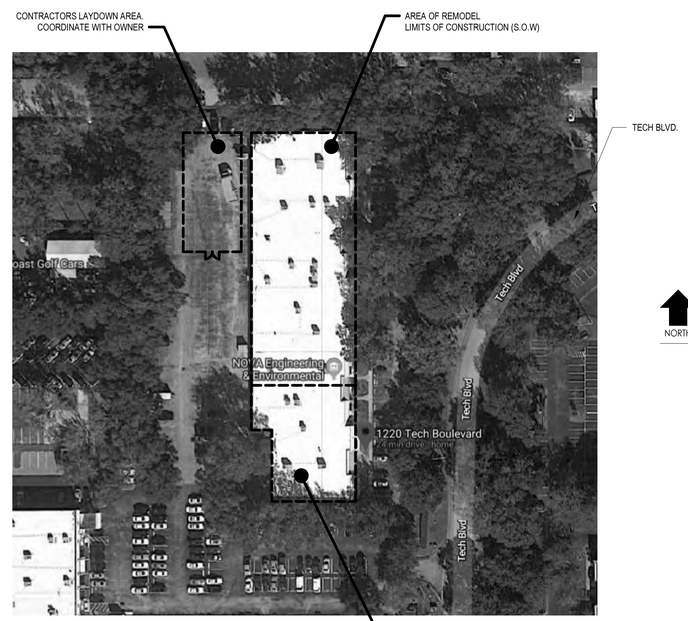

N

1 SITE PLAN
SCALE: NTS

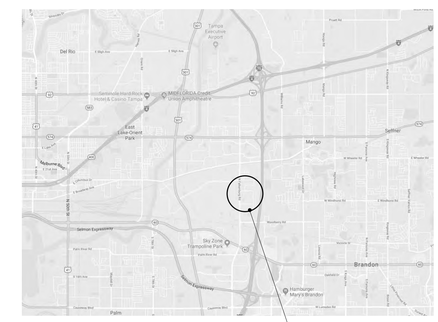

NORTH REGIONAL MAP
SCALE: NTS

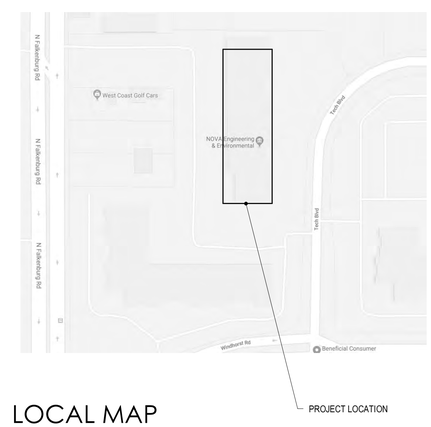

NORTH LOCAL MAP
SCALE: NTS

LONG & ASSOCIATES
architects | engineers, inc.

19002
PINEBROOK BUILDING 4 INTERIOR RENOVATION/CONSTRUCTION DRAWINGS
1220 - 1238 TECH BLVD.
TAMPA, FL 33619
SEPTEMBER 20, 2019

9/19/2019 5:08:06 PM

Seal
CHRISTOPHER K. RAWLINS, A.I.A.
AR100384

DIGITAL SEALS

No.	Date	Issues & Revisions

TO THE BEST OF THE ARCHITECT'S AND/OR ENGINEER'S KNOWLEDGE THESE PLANS AND SPECIFICATIONS COMPLY WITH THE APPLICABLE MINIMUM BUILDING CODES AND THE APPLICABLE FIRE-SAFETY STANDARDS

ABBREVIATIONS

A

A	AREA
AB	ANCHOR BOLT
A/C	AIR CONDITIONING
AC	ALTERNATING CURRENT
ACFL	ACCESS FLOOR
ACI	AMERICAN CONCRETE INSTITUTE
ACOUS	ACOUSTICAL
ACT	ACOUSTICAL CEILING TILE
ADA	AMERICANS WITH DISABILITIES ACT
ADDNL	ADDITIONAL
ADJ	ADJUSTABLE
ADJT	ADJACENT
AFC	ABOVE FINISHED COUNTER
AFF	ABOVE FINISHED FLOOR
AHU	AIR HANDLING UNIT
AIA	AMERICAN INSTITUTE OF ARCHITECTURAL
AISC	AMERICAN INSTITUTE OF STEEL CONSTRUCTION
AL	ACOUSTICAL LINING
ALT	ALTERNATE
ALUM	ALUMINUM
AMP	AMPERE
AMT	AMOUNT
ANC	ANCHOR
ANOD	ANODIZED
AP	ACOUSTICAL PANEL
APT	APARTMENT
APP	APPROXIMATE
AR	ACID RESISTANT
ARCH	ARCHITECTURAL / ARCHITECT
ASB	ASBESTOS
ASHRAE	AMERICAN SOCIETY OF HEATING . REFRIGERATION & AIR-CONDITIONING ENGINEERS
ASME	AMERICAN SOCIETY OF MECHANICAL ENGINEERS
ASPH	ASPHALT
ASSOC	ASSOCIATION
ASTM	AMERICAN SOCIETY FOR TESTING & MATERIALS
AUTO	AUTOMATIC
AUX	AUXILIARY
AVE	AVENUE
AWI	AMERICAN WOODWORKING INSTITUTE

B

BB	BULLETIN BOARD
BD	BOARD
BF	BOTTOM FACE
BIT	BITUMINOUS
BLDG	BUILDING
BLK	BLOCK
BLKG	BLOCKING
BK	BACK
B/M	BENCH MARK
BM	BEAM
BOT	BOTTOM
BP	BASE PLATE
BRG	BEARING
BSMT	BASEMENT
BTU	BRITISH THERMAL UNIT
BTUH	BRITISH THERMAL UNIT PER HOUR
BTWN	BETWEEN
BUR	BUILT UP ROOFING
BW	BOTH WAYS

C

CAB	CABINET
C/C	CENTER TO CENTER
CEM	CEMENT
CER	CERAMIC
CF	CUBIC FEET
CFM	CUBIC FEET PER MINUTE
CFS	CUBIC FEET PER SECOND
CH	CHANNEL
CJ	CONTROL JOINT
CL	CENTER LINE
CLG	CEILING
CLR	CLEAR
CM	CONSTRUCTION MANAGER
CMU	CONCRETE MASONRY UNIT
CO	CLEAN OUT
COL	COLUMN
COMP	COMPUTER
CND	CONDUIT
CONC	CONCRETE
CONN	CONNECTION
CONST	CONSTRUCTION
CONT	CONTINUOUS
CONTR	CONTRACTOR
CORR	CORRIDOR
CPLG	COUPLING
CPT	CARPET
CPU	COMPUTER PROCESSING UNIT
CS	CARBON STEEL
CT	CERAMIC TILE
CTR	CENTER
CU	CONDENSER UNIT
CY	CUBIC YARD

D

DBL	DOUBLE
DEM	DEMOLITION
DEN	DENSITY
DET	DETAIL
DF	DRINKING FOUNTAIN
DIA	DIAMETER
DIAG	DIAGONAL
DIFF	DIFFUSER
DIM	DIMENSION
DISC	DISCONNECT
DL	DEAD LOAD
DO	DITTO
DN	DOWN
DR	DOOR
DS	DOWNSPOUT
DWG	DRAWING

E

E	MODULUS OF ELASTICITY
EA	EACH
EB	EXPANSION BOLT
EF	EXHAUST FAN
EFF	EFFICIENCY
EH	EXTRA HAZARD
EL	ELEVATION
ELEC	ELECTRIC / ELECTRICAL
EMERG	EMERGENCY
EMCS	ENERGY MANAGEMENT & CONTROL SYSTEM
ENCL	ENCLOSURE
ENGR	ENGINEER
ENGRG	ENGINEERING
EP	EXPLOSION PROOF
EQ	EQUAL
EQPT	EQUIPMENT
EST	ESTIMATE / ESTIMATED
ETR	EXISTING TO REMAIN
EVAP	EVAPORATIVE / EVAPORATOR
EVTR	ELEVATOR
EW	EACH WAY
EWC	ELECTRIC WATER COOLER
EWH	ELECTRIC WATER HEATER
EXF	EXFILTRATION
EXH	EXHAUST
EJ	EXPANSION JOINT
EXP	EXPANSION
EXR	EXISTING RELOCATED
EXST	EXISTING
EXT	EXTERIOR

F

FA	FIRE ALARM
FACP	FIRE ALARM CONTROL PANEL
FBRK	FIRE BRICK
FC	FLEXIBLE CONNECTION
FD	FLOOR DRAIN
FDC	FIRE DEPARTMENT CONNECTION
FDN	FOUNDATION
FDPR	FIRE DAMPER
FE	FIRE EXTINGUISHER
FEC	FIRE EXTINGUISHER CABINET
FF	FINISHED FLOOR
FFE	FINISHED FLOOR ELEVATION
FFF	FROM FINISHED FLOOR
FG	FLANGED CONNECTION
FH	FIRE HYDRANT
FHMS	FLAT HEAD MACHINE SCREW
FHS	FIRE HOSE STATION
FHWS	FLAT HEAD WOOD SCREW
FIN	FINISH / FINISHED
FJT	FLUSH JOINT
FL	FLOOR
FLG	FLANGE
FLSHG	FLASHING
FLR	FLUORESCENT
FP	FIRE PROTECTION
FPG	FIREPROOFING
FPM	FEET PER MINUTE
FPS	FEET PER SECOND
FO	FLAT OVAL
FOC	FACE OF CONCRETE
FOF	FACE OF FINISH
FOM	FACE OF MASONRY
FOS	FACE OF STUD
FR	FRAME
FRMG	FRAMING
FRTL	FIRE RETARDANT TREATED LUMBER
FS	FULL SIZE
FT	FEET
FTG	FOOTING
FURR	FURRED / FURRING
FV	FLUSH VALVE
FZR	FREEZER

G

GA	GAGE / GAUGE
GAL	GALLON
GALV	GALVANIZED
GB	GRAB BAR
GC	GENERAL CONTRACTOR
GI	GALVANIZED IRON
GL	GLASS / GLAZING
GLBK	GLASS BLOCK
GP	GENERAL PURPOSE
GPM	GALLONS PER MINUTE
GR	GROOVED CONNECTION
GRD	GRADE
GRND	GROUND
GS	GALVANIZED STEEL
GST	GLAZED STRUCTURAL TILE
GWB	GYPSUM WALL BOARD
GYP	GYPSUM

H

HB	HOSE BIBB
HC	HOLLOW CORE
HCP	HANDICAPPED
HD	HARD
HDNR	HARDENER
HDW	HARDWARE
HGR	HANGER
HM	HOLLOW METAL
HORIZ	HORIZONTAL
HP	HORSEPOWER
HR	HOUR
HRS	HOURS
HSS	HOLLOW STRUCTURAL STEEL
HT	HEIGHT
HVAC	HEATING, VENTILATION, AIR-CONDITIONING
HZ	HERTZ / CYCLES PER SECOND

I

I	MOMENT OF INERTIA
IC	INTERCOM
ID	INSIDE DIAMETER
IF	INSIDE FACE
IN	INCHES
INCL	INCLUDED
INF	INFILTRATION
INFO	INFORMATION
INSUL	INSULATION
INT	INTERIOR
INV	INVERT
IP	IRON PIPE

J

J	JUNCTION
JAN	JANITOR
JB	JUNCTION BOX
JT	JOINT
JST	JOIST

K

K	KIP / 1000 LB
KD	KNOCKDOWN
KG	KILOGRAM
KIT	KITCHEN
KV	KILOVOLT
KO	KNOCKOUT
KVA	KILOVOLT AMPERE
KW	KILOWATT(S)

L

L	LENGTH
LAB	LABORATORY
LAM	LAMINATE(D)
LAV	LAVATORY
LBS	POUNDS
LF	LINEAR FOOT
LG	LARGE
LH	LEFT HAND
LIN	LINEAR
LL	LIVE LOAD
LLH	LONG LEG HORIZONTAL
LLV	LONG LEG VERTICAL
LO	LOCKOUT
LOC	LOCATION
LS	LUMP SUM
LT	LIGHT
LTG	LIGHTING
LT/GA	LIGHT GAGE
LTH	LIGHT HAZARD
LTWT	LIGHTWEIGHT
LVG	LEAVING
LVR	LOUVER

M

M	BENDING MOMENT
MAS	MASONRY
MAT	MATERIAL
MAX	MAXIMUM
MB	MARKER BOARD
MBF	1OOO BOARD FEET
MC	MEDICINE CABINET
MD	MOTORIZED DAMPER
MECH	MECHANICAL
MED	MEDIUM
MEZZ	MEZZANINE
MFD	MANUFACTURED
MFR	MANUFACTURER
MFG	MANUFACTURING
MH	MANHOLE
MIL	MILITARY
MIN	MINIMUM
MIRR	MIRROR
MISC	MISCELLANEOUS
MK	MARK
ML	METAL LATH
MM	MILLIMETER(S)
MO	MASONRY OPENING
MOD	MODEL
MOV	MOVABLE
MP	MIDPOINT
MR	MOISTURE RESISTANT
MS	MOP SINK
MT	METAL THRESHOLD
MTD	MOUNTED
MTL	METAL
MTR	METER
MULL	MULLION
MW	MICROWAVE

N

N/A	NOT APPLICABLE
NAT	NATURAL
NEC	NATIONAL ELECTRIC CODE
NEG	NEGATIVE
NFA	NET FREE AREA
NIC	NOT IN CONTRACT
NO	NUMBER
NOA	NOTICE OF ACCEPTANCE
NRC	NOISE REDUCTION COEFFICIENT
NTP	NOTICE TO PROCEED
NTS	NOT TO SCALE

O

O	ROUND
OA	OUTDOOR AIR
OAI	OUTDOOR AIR INTAKE
OC	ON CENTER
OD	OUTSIDE DIAMETER
ODH	ORDINARY HAZARD
OF	OUTSIDE FACE
OH	OVERHEAD
OHD	OVERHEAD DOOR
OJ	OPEN WEB JOIST
OPNG	OPENING
OPP	OPPOSITE
OPP HD	OPPOSITE HAND
OZ	OUNCE

P

PA	PUBLIC ADDRESS
PART	PARTITION
PC	PHOTOCELL
PCC	PRECAST CONCRETE
PCF	POUNDS PER CUBIC FOOT
PCS	PIECES
PFD	PREFORMED
PH	PHASE
PIV	POST INDICATOR VALVE
PJF	PREFORMED JOINT FILLER
PL	PLATE
PLAS	PLASTER
PLAM	PLASTIC LAMINATE
PLF	POUNDS PER LINEAR FOOT
PLYWD	PLYWOOD
PNL	PANEL
PNLB	PANELBOARD
PNT	POINT
POS	POSITIVE
PP	POWER POLE
PR	PAIR
PREFAB	PREFABRICATED
PRES	PRESSURE
PROJ	PROJECTION
PSC	PRESTRESSED CONCRETE
PSF	POUNDS PER SQUARE FOOT
PSI	POUNDS PER SQUARE INCH
PT	PRESSURE TREATED
PTC	POST TENSIONED CONCRETE
PTD	PAINTED
PU	PER UNIT
PVC	POLYVINYL CHLORIDE
PVMT	PAVEMENT
PWR	POWER

Q

QTY	QUANTITY
QT	QUARRY TILE

R

R	RISE
RA	RETURN AIR
RAD	RADIUS
RCP	REFLECTED CEILING PLAN
RD	ROOF DRAIN
REC	RECEIVER
RECIP	RECIPROCATING
RECIRC	RECIRCULATING
RECPT	RECEPTACLE
RED	REDUCE
REF	REFERENCE
REFG	REFRIGERATOR
REG	REGULAR
REINF	REINFORCE(D), REINFORCING
REQD	REQUIRED
REQT	REQUIREMENT
RET	RETURN
REV	REVISION
RFG	ROOFING
RG	RETURN GRILLE
RH	RELATIVE HUMIDITY
RM	ROOM
RO	ROUGH OPENING
ROW	RIGHT OF WAY
RP	RAIN PROOF
RPM	REVOLUTIONS PER MINUTE
RT	RIGHT
RTU	ROOF TOP UNIT
RV	ROOF VENT
RWC	RAIN WATER COLLECTOR
RWL	RAIN WATER LEADER

S

S	SANITARY
SA	SUPPLY AIR
SC	SOLID CORE
SCH	SCHEDULE
SCT	STRUCTURAL CLAY TILE
SD	SMOKE DETECTOR
SDN	STORM DRAIN
SEC	SECONDARY
SECT	SECTION
SERV	SERVICE
SF	SQUARE FEET
SHT	SHEET
SHTG	SHEATHING
SIM	SIMILAR
SJ	SAWCUT JOINT
SM	SMALL
SNDP	SOUNDPROOF
SPEC	SPECIFICATION(S)
SPKR	SPEAKER
SPRK	SPRINKLER
SQ	SQUARE
SQ FT	SQUARE FEET
SQ IN	SQUARE INCH
SQ YD	SQUARE YARD
SST	STAINLESS STEEL
STA	STATION
STC	SOUND TRANSMISSION CLASS
STD	STANDARD
STL	STEEL
STL JST	STEEL JOIST
STM	STEAM
STOR	STORAGE
STRUC	STRUCTURAL
SUP	SUPPLY
SUSP	SUSPEND(ED)
SW	SWITCH
SY	SQUARE YARD
SYM	SYMMETRICAL
SYMB	SYMBOL
SYS	SYSTEM

T

T	TOP
T/	TOP OF
T/BM	TOP OF BEAM
T/C	TOP OF CURB
T/F	TOP FACE
T/FTG	TOP OF FOOTING
T/MAS	TOP OF MASONRY
T/P	TOP OF PIPE
T/PL	TOP OF PLATE
T/SLAB	TOP OF SLAB
T/STL	TOP OF STEEL
T/W	TOP OF WALL
T&B	TOP AND BOTTOM
T&G	TONGUE AND GROOVE
TB	TACK BOARD
TC	TIME CLOCK
TEL	TELEPHONE
TEMP	TEMPERATURE
THK	THICK(NESS)
THRD	THREADED
TLT	TOILET
TOL	TOLERANCE
TPTN	TOILET PARTITION
TR	TOWEL ROD
TRAN	TRANSOM
TRD	TREAD
TSHD	THRESHOLD
TSTAT	THERMOSTAT
TV	TELEVISION
TYP	TYPICAL

U

UC	UNDERCUT
UCR	UNDER COUNTER
UG	UNDERGROUND
UL	UNDERWRITER'S LABORATORY
UON	UNLESS OTHERWISE NOTED
URL	URINAL
UTY	UTILITY

V

V	VOLTS
VA	VOLTS
VAC	VACUUM
VAV	VARIABLE AIR VOLUME
VB	VINYL BASE
VCT	VINYL COMPOSITION TILE
VEL	VELOCITY
VERT	VERTICAL
VF	VINYL FABRIC
VIF	VERIFY IN FIELD
VIN	VINYL
VOL	VOLUME
VPR	VAPOR RETARDER
VT	VINYL TILE
VTR	VENT THRU ROOF
VWC	VINYL WALL COVERING

W

W	WIDE(WIDTH)
W/	WITH
W/O	WITHOUT
WAINS	WAINSCOT
WC	WATER CLOSET
WCO	WALL CLEANOUT
WD	WOOD
WF	WIDE FLANGE
WH	WALL HUNG
WIN	WINDOW
WP	WEATHER PROTECTED
WPT	WORK POINT
WT	WEIGHT
WTW	WALL TO WALL
WWF	WELDED WIRE FABRIC

X

XFR	TRANSFER
XFMR	TRANSFORMER
XHVY	EXTRA HEAVY
XSTG	EXTRA STRONG
XXSTG	DOUBLE EXTRA STRONG

Y

YD	YARD

SYMBOL LEGEND

SYMBOL	DESCRIPTION
101	DOOR NUMBER, SEE SCHEDULE
A	WINDOW TYPE
A	PARTITION TYPE
1	ASSEMBLY TYPE
Number ASI # 88	REVISION TAG
1	NOTE TAG
888	EQUIPMENT TAG, SEE SCHEDULE
A99.9 1	INTERIOR ELEVATION
A	COLUMN CENTERLINE
1 A101	DETAIL
1 A101	SECTION
1 A101	EXTERIOR ELEVATION
FFE 135' - 5 1/2"	FINISHED FLOOR ELEVATION
9' - 0" AFF	FINISHED FLOOR ELEVATION

MATERIALS LEGEND

- CMU WALL, THICKNESS VARIES
- CMU WALL (RATED)
- BRICK VENEER
- STUD WALL, THICKNESS VARIES
- STUD WALL (RATED)
- EXISTING WALL TO REMAIN
- RIGID INSULATION
- CAVITY INSULATION
- INSULATION (BATT, BLANKET, OR FILL)
- WOOD (FINISHED)
- PLYWOOD (SMALL SECTION)
- PLYWOOD (LARGE SECTION)
- STEEL (LARGE SECTION)
- ROUGH LUMBER (CONTINUOUS)
- ROUGH LUMBER (INTERMITTENT)
- PRECAST CONC. OR CUT STONE
- CONCRETE
- COMPACTED FILL OR EARTH
- FINISHED GRADE

NOTE: EXISTING BUILDING WALLS, DOORS, FIXTURES, EQUIPMENT, ETC. ARE GENERALLY SHOWN LIGHTER & WITHOUT MATERIAL HATCHING

GENERAL NOTES

A. ALL WORK SHALL BE PERFORMED IN STRICT ACCORDANCE WITH THE GENERAL CONDITIONS OF THE CONTRACT AND THE PROJECT SPECIFICATIONS, INCLUDING THE REQUIREMENTS OF DIVISION ONE.

B. ALL WORK SHALL BE PERFORMED IN STRICT ACCORDANCE WITH THE REQUIREMENTS OF THE FLORIDA BUILDING CODE, 6TH EDITION FBC 2017 AND 2017 FLORIDA FIRE PROTECTION CODE.

C. IN SOME CASES, THE REQUIREMENTS SET FORTH IN THE CONSTRUCTION DRAWINGS AND SPECIFICATIONS EXCEED THE MINIMUM REQUIREMENTS OF THE CODE.

D. THE CONSTRUCTION MANAGER / GENERAL CONTRACTOR SHALL COORDINATE THE SEQUENCING AND EXECUTION OF ALL TRADES IN STRICT CONFORMANCE WITH THE REQUIREMENTS OF ALL CONSTRUCTION DRAWINGS AND CONTRACT DOCUMENTS.

E. THE CONSTRUCTION MANAGER / GENERAL CONTRACTOR SHALL MAINTAIN & PROTECT FROM DAMAGE ALL PORTIONS OF THE EXISTING FACILITY SCHEDULED TO REMAIN OR NOT INDICATED FOR DEMOLITION. ALL DAMAGED AREAS & ELEMENTS SHALL BE REPLACED TO MATCH EXISTING ADJACENT CONSTRUCTION IN ALL RESPECTS.

F. PRIOR TO ANY DEMOLITION, THE CM, OWNER AND A/E SHALL WALK THROUGH THE PROJECT AND ESTABLISH A PUNCH LIST OF EXISTING CONDITIONS. ITEMS NOT IDENTIFIED AND LATER DAMAGED DUE TO CONSTRUCTION SHALL BE THE CONTRACTORS RESPONSIBILITY.

G. FIELD VERIFY ALL DIMENSIONS PRIOR TO DEMOLITION WORK. COORDINATE AS REQ'D FOR NEW WORK.

H. OWNER SHALL CAREFULLY REMOVE AND ABATE ANY ASBESTOS. AN ASBESTOS REPORT IS AVAILABLE FROM THE OWNER AND SHALL BE OBTAINED PRIOR TO CONSTRUCTION

I. THE CONSTRUCTION MANAGER / GENERAL CONTRACTOR SHALL PROTECT THE PUBLIC FROM CONSTRUCTION ACTIVITIES AND PROVIDE FOR A SECURE CONSTRUCTION SITE.

DIMENSIONING CONVENTIONS

- ALIGN NEW PARTITION TO EXIST (VERIFY EXIST PARTITION CONSTRUCTION MATCHES NEW PARTITION CONSTRUCTION)
- TO/FROM THE CENTER LINE OF NEW WALL CONSTRUCTION
- TO/FROM THE FINISHED FACE OF NEW WALL CONSTRUCTION
- TO/FROM COLUMN CENTER LINES
- ALIGN ℄ OF NEW PARTITION WITH ℄ OF COLUMN
- ALIGN NEW PARTITION TO FINISH GWB FLUSH BOTH SIDES OF COLUMN
- ALIGN ℄ OF NEW PARTITION TO ℄ OF WINDOW MULLION

PRODUCT APPROVAL SCHEDULE

STATEMENT:
THE CONSTRUCTION MANAGER SHALL FOR EACH PRODUCT INSTALLED IN THE BUILDING ENVELOPE, PROVIDE THE APPLICABLE PRODUCT APPROVAL NUMBERS TO THE ARCHITECT THROUGH THE SUBMITTAL PROCESS AS SPECIFIED. THE FOLLOWING LIST IS BASIS OF DESIGN ONLY. SEE SPECS FOR OTHER ACCEPTABLE MANUFACTURERS.

DESIGN CRITERIA: REFER TO WIND PRESSURE CHART ON SHEET G0.4

1. COMPLY WITH THE FLORIDA BUILDING CODE 6TH EDITION (2017)
2. ULTIMATE WIND SPEED - - 155MPH
3. EQUIVALENT NOMINAL WIND SPEED - 121MPH
4. RISK CATEGORY - - III
5. EXPOSURE CATEGORY - - C

PRODUCT	MANUFACTURER	DESCRIPTION WITH FLORIDA PRODUCT #			FPA #	NOA #	EXPIRATION DATE	LEGACY REPORTS #
		CASEMENT	FIXED	AWNING				
EXTERIOR DOORS AND FRAMES	STEELCRAFT	HOLLOW METAL SINGLE DOOR			—	#17-0426.01	5/05/2023	—
STRUCTURAL COMPONENTS					—	—	—	—
	CAST-CRETE	MASONRY LINTELS			#158-R12	#19-0130.13	—	—
	ITW BUILDEX	TAPCON MASONRY FASTENERS			—	#16-1222.06	08-31-21	—
	SIMPSON WEDGE-ALL	EXPANSION ANCHORS-MASONRY			#15730.7	—	—	#ESR-1396
	SIMPSON STRONG-BOLT 2	EXPANSION ANCHORS- CRACKED CONCRETE			#15731.2	—	—	#ESR-3037
	SIMPSON SET-XP OR ET-HP SIMPSON AT-XP	ADHESIVE ANCHORS-CRACKED CONCRETE			#17449.2 #17449.1 #16230.1	—	—	#ESR-2508 #ESR-3372 #ER-0263
	SIMPSON TITEN HD	CONCRETE ANCHORS-CRACKED CONCRETE			#15730.6	—	—	#ESR-2713
	ITW BUILDEX TAPCONS	CONCRETE ANCHORS-MASONRY			—	—	—	#ESR-1671
	SIMPSON TITIEN MASONRY SCREWS	CONCRETE ANCHORS-MASONRY			#2355.1	—	—	(FL 2355.1)
	SIMPSON POWDER ACTUATED FASTENERS	POWDER ACTUATED FASTENERS (PAF'S)			#15730.3	—	—	#ESR-2138
	SIMPSON STRONG-DRIVE XL OR DRILLING X METAL SCREWS	SELF DRILLING TEK SCREWS			—	—	—	#ESR-3006

LONG & ASSOCIATES
architects | engineers, inc.
4525 South Manhattan Avenue, Tampa, FL 33611-2305
T:813.839.0506 F:813.839.4616 AAC001624 1828 CGC1511025
www.longandassociates.com

THIS DOCUMENT IS COPYRIGHT MATERIAL, ANY DISCLOSURE, UNAUTHORIZED USE, DISSEMINATION OR DUPLICATION WITHOUT THE EXPRESS WRITTEN CONSENT OF LONG & ASSOCIATES IS PROHIBITED ALL RIGHTS RESERVED

HILLSBOROUGH COUNTY SHERIFF'S OFFICE

PINEBROOK BUILDING 4 INTERIOR RENOVATION

1220 - 1238 TECH BLVD.
TAMPA, FL 33619

Seal

CHRISTOPHER K. RAWLINS, A.I.A.
AR100384

No.	Date	Issues & Revisions

TO THE BEST OF THE ARCHITECT'S AND/OR ENGINEER'S KNOWLEDGE THESE PLANS AND SPECIFICATIONS COMPLY WITH THE APPLICABLE MINIMUM BUILDING CODES AND THE APPLICABLE FIRE-SAFETY STANDARDS

Phase: 100% CONSTRUCTION DRAWINGS
Drawn By: JP
Checked By: CKR
Job No: 19002
Date: SEPTEMBER 20, 2019
9/19/2019 5:27:58 PM

ABBREVIATIONS, SYMBOL LEGEND, & MATERIALS LEGEND

G0.2

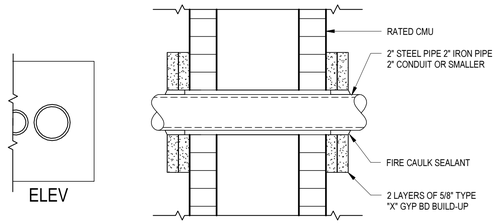

UL DESIGN # W-J-1033
1 & 2 HR BLK, MULIT-METALLIC

12 PIPE PENETRATION
SCALE: 3" = 1'-0"

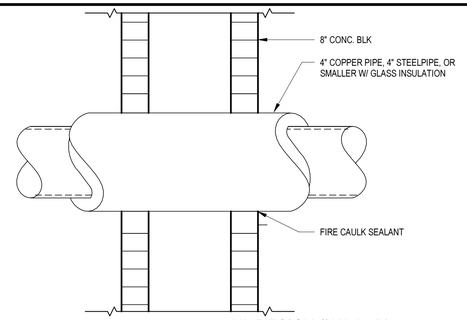

UL DESIGN # W-J-5007
1 & 2 HR BLK, INSUL METALLIC

8 PIPE PENETRATION
SCALE: 3" = 1'-0"

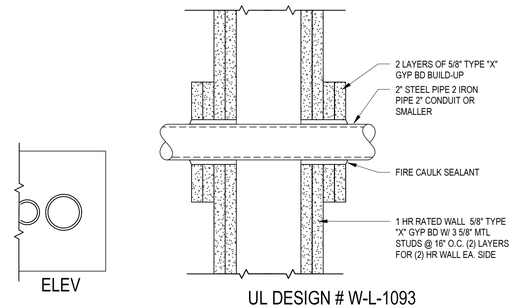

UL DESIGN # W-L-1093
1 & 2 HR FRAMING, MULTI-METALLIC

4 PIPE PENETRATION
SCALE: 3" = 1'-0"

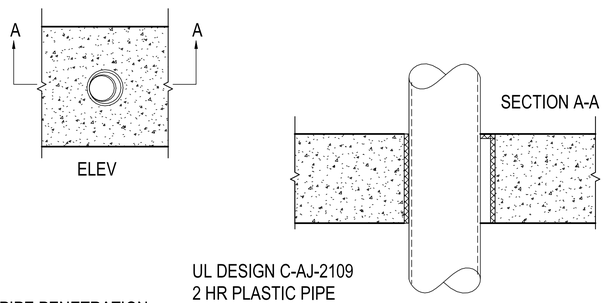

UL DESIGN C-AJ-2109
2 HR PLASTIC PIPE

11 PIPE PENETRATION
SCALE: 3" = 1'-0"

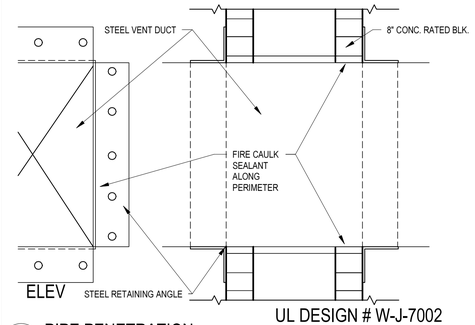

UL DESIGN # W-J-7002
2 HR BLK, METALLIC DUCT

7 PIPE PENETRATION
SCALE: 3" = 1'-0"

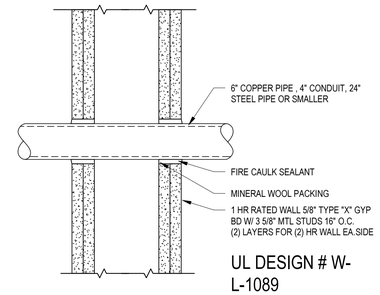

UL DESIGN # W-
L-1089
1 & 2 HR FRAMING,
METALLIC PIPE

3 PIPE PENETRATION
SCALE: 3" = 1'-0"

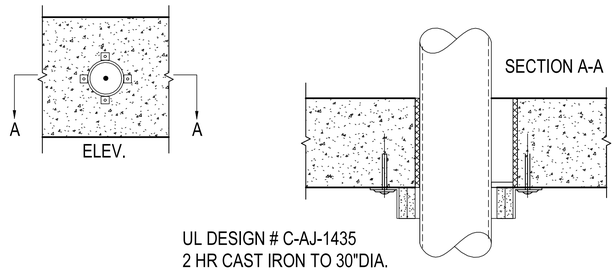

UL DESIGN # C-AJ-1435
2 HR CAST IRON TO 30"DIA.
COPPER PIPE OR CONDUIT

10 PIPE PENETRATION
SCALE: 3" = 1'-0"

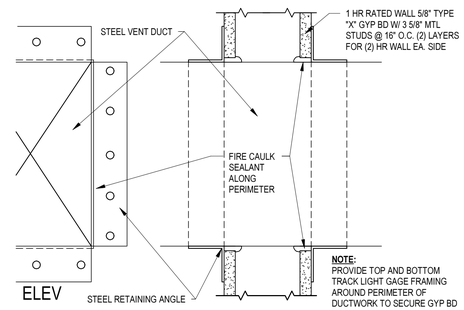

UL DESIGN # W-L-7008
1 & 2 HR FRAMING, METALLIC DUCT

6 PIPE PENETRATION
SCALE: 3" = 1'-0"

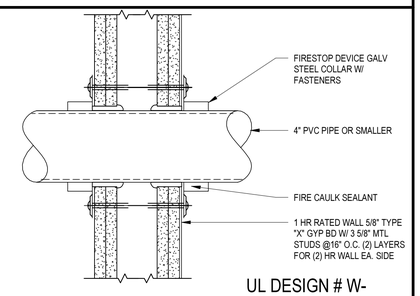

UL DESIGN # W-
L-2029
1 & 2 HR FRAMING,
2" PVC PIPE

2 PIPE PENETRATION
SCALE: 3" = 1'-0"

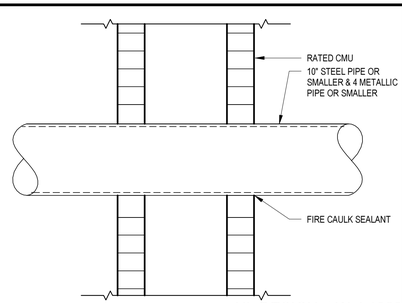

UL DESIGN # W-J-1028
1 & 2 HR D-2 BLK,
METALLIC

13 PIPE PENETRATION
SCALE: 3" = 1'-0"

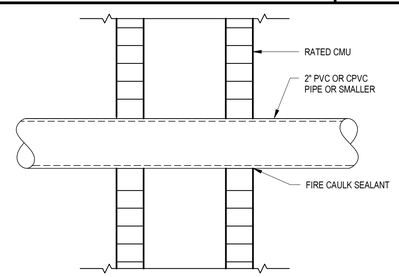

UL DESIGN # W-J-2019
1 & 2 HR BLK, NON METALLIC

9 PIPE PENETRATION
SCALE: 3" = 1'-0"

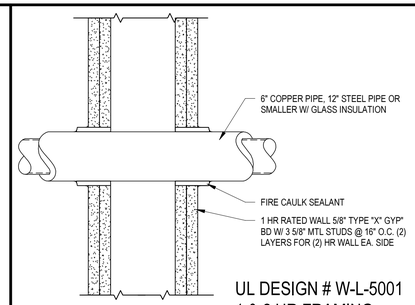

UL DESIGN # W-L-5001
1 & 2 HR FRAMING,
INSUL METALLIC

5 PIPE PENETRATION
SCALE: 3" = 1'-0"

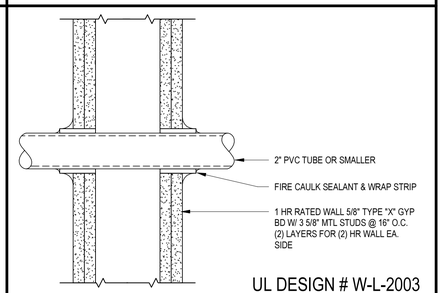

UL DESIGN # W-L-2003
1 & 2 HR FRAMING, 2"
PVC PIPE

1 PIPE PENETRATION
SCALE: 3" = 1'-0"

LONG & ASSOCIATES
architects | engineers, inc.
4525 South Manhattan Avenue, Tampa, FL 33611-2305
T:813.839.0506 F:813.839.4616 AAC001624 IB28 CGC1511025
www.longandassociates.com

THIS DOCUMENT IS COPYRIGHTED IN A UNITED STATES COURT OF LAW. UNAUTHORIZED USE OF THIS DOCUMENT IS PROHIBITED WITHOUT THE EXPRESS WRITTEN CONSENT OF LONG & ASSOCIATES. ALL RIGHTS RESERVED.

HILLSBOROUGH COUNTY SHERIFF'S OFFICE

PINEBROOK BUILDING 4 INTERIOR RENOVATION

1220 - 1238 TECH BLVD.
TAMPA, FL 33619

Seal

CHRISTOPHER K. RAWLINS, A.I.A.
AR100384

No.	Date	Issues & Revisions

TO THE BEST OF THE ARCHITECT'S AND/OR ENGINEER'S KNOWLEDGE THESE PLANS AND SPECIFICATIONS COMPLY WITH THE APPLICABLE MINIMUM BUILDING CODES AND THE APPLICABLE FIRE-SAFETY STANDARDS

Phase: 100% CONSTRUCTION DRAWINGS
Drawn By: JP
Checked By: CKR
Job No: 19002
Date: SEPTEMBER 20, 2019
9/19/2019 5:08:12 PM

UL-RATED PIPE PENETRATION DETAILS

G0.3

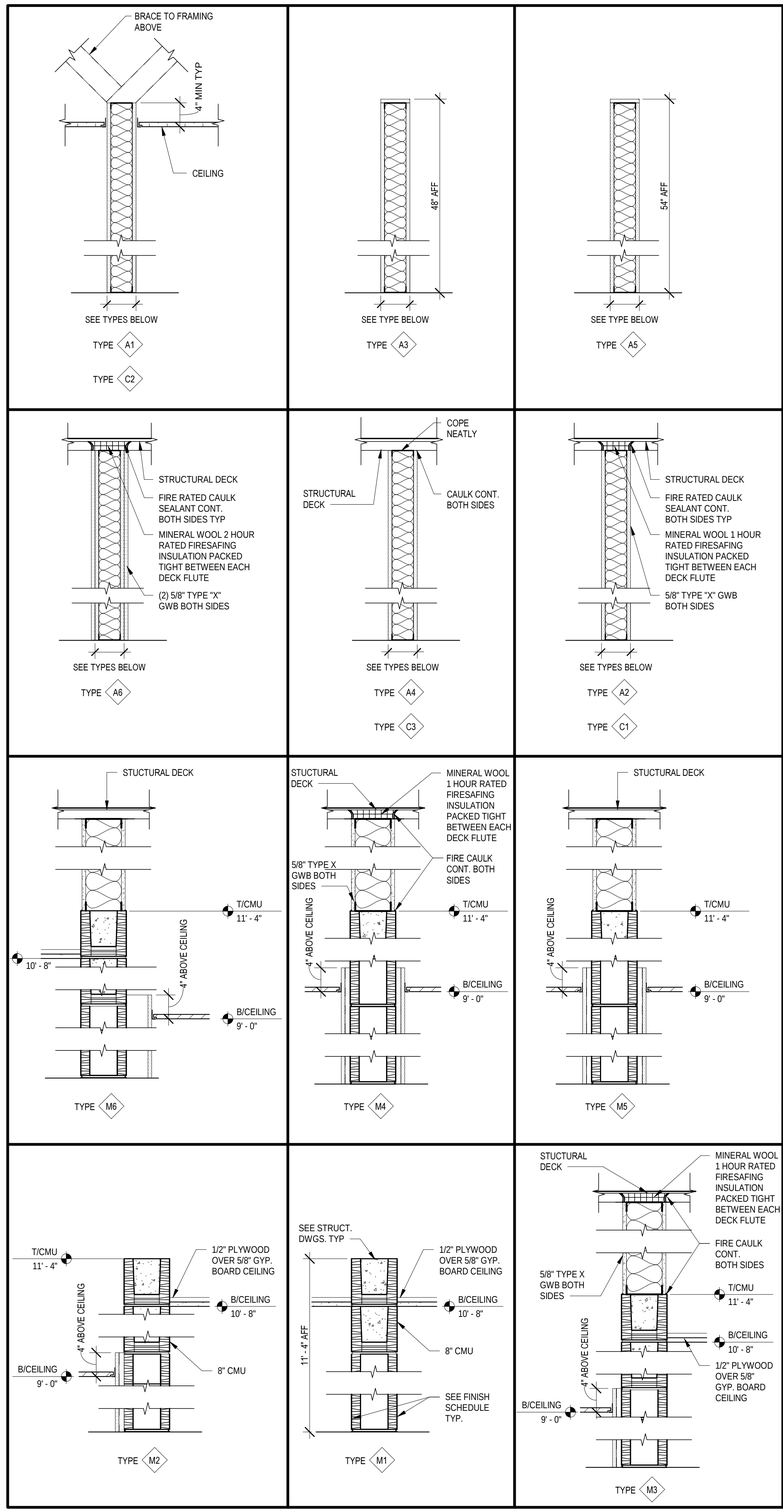

PARTITION TYPES LEGEND

TYPE M1	8" CMU 11' - 4" AFF
TYPE M2	8" CMU 11' - 4" AFF W/ ONE LAYER 5/8" GWB ON ONE SIDE OVER 7/8" METAL FURRING, 4" ABOVE CEILING
TYPE M3	8" CMU 11' - 4" AFF W/ ONE LAYER 5/8" GWB ON ONE SIDE OVER 7/8" METAL FURRING, 4" ABOVE CEILING. CONTINUE ABOVE 11' - 4" TO DECK WITH TYPE C1 WALL ASSEMBLY
TYPE M4	8" CMU 11' - 4" AFF W/ ONE LAYER 5/8" GWB ON EA. SIDE OVER 7/8" METAL FURRING, 4" ABOVE CEILING. CONTINUE ABOVE 11' - 4" TO DECK WITH TYPE C1 WALL ASSEMBLY
TYPE M5	8" CMU 11' - 4" AFF W/ ONE LAYER 5/8" GWB ON EA. SIDE OVER 7/8" METAL FURRING, 4 " ABOVE CEILING. CONTINUE ABOVE 11' - 4" TO DECK WITH TYPE C3 WALL ASSEMBLY
TYPE M6	8" CMU 11' - 4" AFF W/ ONE LAYER 5/8" GWB ON ONE SIDE OVER 3-5/8" METAL STUDS, 4" ABOVE CEILING. CONTINUE ABOVE 11' - 4" TO DECK WITH TYPE C3 WALL ASSEMBLY
TYPE M7	8" CMU 11' - 4" AFF W/ ONE LAYER 5/8" GWB ON ONE SIDE OVER 3-5/8" METAL STUDS AND ONE LAYER 5/8" GWB OVER 7/8" METAL FURRING, 4" ABOVE CEILING. CONTINUE ABOVE 11' - 4" TO DECK WITH TYPE C3 WALL ASSEMBLY
TYPE A1	3-5/8" METAL STUDS @ 16" OC, ONE LAYER 5/8" GWB EA. SIDE. EXTEND STUDS & GWB 4" ABOVE CEILING W/ 4" BATT INSULATION
TYPE A2	3-5/8" METAL STUDS @ 16" OC, ONE LAYER TYPE "X" 5/8" GWB EA. SIDE. EXTEND STUDS & GWB TO DECK W/ 4" BATT INSULATION. 1 HR FIRE RATED (UL U419)
TYPE A3	3-5/8" METAL STUDS @ 16" OC, ONE LAYER 5/8" GWB EA. SIDE. EXTEND STUDS & GWB 48" AFF W/ 4" BATT INSULATION
TYPE A4	3-5/8" METAL STUDS @ 16" OC, ONE LAYER 5/8" GWB EA. SIDE. EXTEND STUDS & GWB TO DECK W/ 4" BATT INSULATION
TYPE A5	3-5/8" METAL STUDS @ 16" OC, ONE LAYER 5/8" GWB EA. SIDE. EXTEND STUDS & GWB 54" AFF W/ 4" BATT INSULATION
TYPE A6	3-5/8" METAL STUDS @ 16" OC, TWO LAYERS TYPE "X" 5/8" GWB EA. SIDE. EXTEND STUDS & GWB TO DECK W/ 4" BATT INSULATION. 2 HR FIRE RATED (UL U419)
TYPE A7	3-5/8" METAL STUDS @ 16" OC, ONE LAYER 5/8" GWB EA. SIDE. EXTEND STUDS & GWB 6' - 0" AFF W/ 4" BATT INSULATION
TYPE A8	4" METAL STUDS @ 16" OC, ONE LAYER 5/8" GWB ON ONE SIDE. EXTEND STUDS & GWB 7' - 0" AFF W/ 4" BATT INSULATION
TYPE C1	6" METAL STUDS @ 16" OC, ONE LAYER TYPE "X" 5/8" GWB EA. SIDE, W/ ONE SIDE ON 25 GA. FURRING CHANNELS. EXTEND STUDS & GWB TO DECK W/ 6" BATT INSULATION. 1 HR FIRE RATED (UL U419)
TYPE C2	6" METAL STUDS @ 16" OC, ONE LAYER 5/8" GWB EA. SIDE. EXTEND STUDS & GWB 4" ABOVE CEILING W/ 6" BATT INSULATION
TYPE C3	6" METAL STUDS @ 16" OC, ONE LAYER 5/8" GWB EA. SIDE. EXTEND STUDS & GWB TO DECK W/ 6" BATT INSULATION
TYPE C4	6" METAL STUDS @ 16" OC, ONE SIDE W/ TWO LAYERS TYPE "X" 5/8" GWB ON 25 GA. FURRING CHANNELS AND ONE SIDE WITH ONE LAYER TYPE "X" 5/8 GWB. EXTEND STUDS & GWB TO DECK W/ 6" BATT INSULATION. 2 HR FIRE RATED (UL U453)

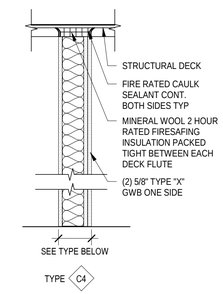

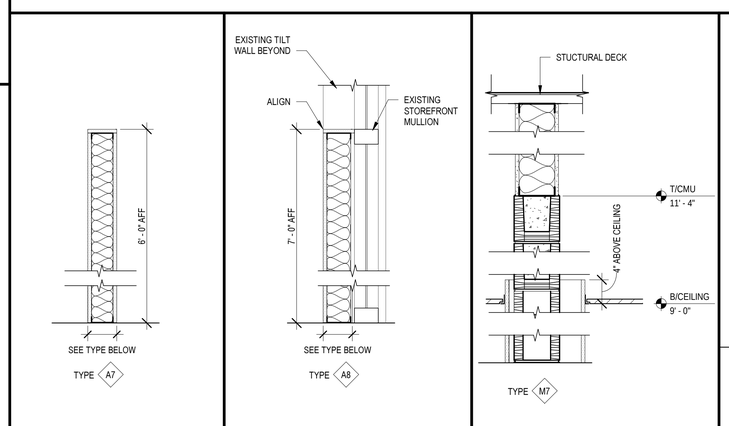

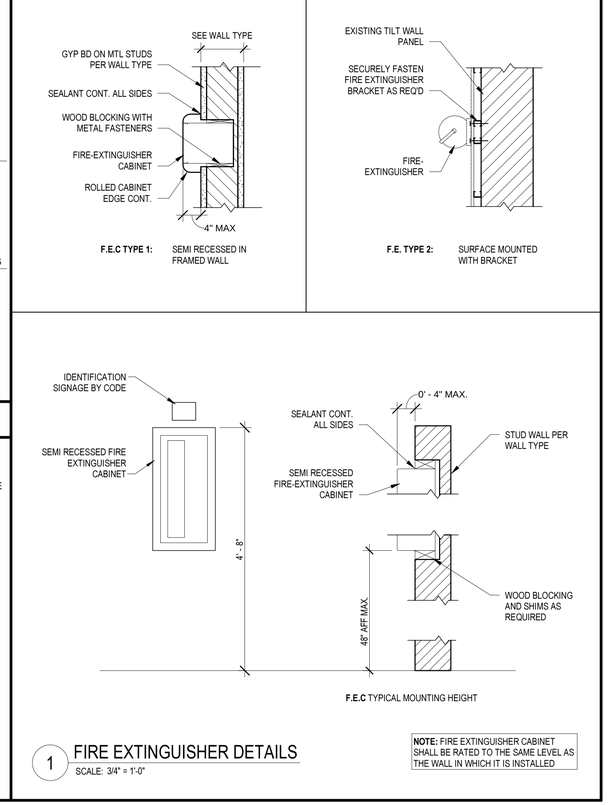

PARTITION TYPE NOTES

1. ALL PENETRATIONS IN RATED WALLS ARE TO BE COMPLETELY SEALED TO MAINTAIN A RATED BARRIER FROM FLOOR TO DECK ABOVE.
2. FOR CLARITY, ALL WALLBOARD IN THIS SCHEDULE IS REFERRED TO AS GYPSUM WALLBOARD. HOWEVER, THE CONTRACTOR SHOULD REFER TO THE SPECS TO DETERMINE IF THE FINISH MATERIAL SHALL BE ABUSE RESISTANT GYPSUM WALLBOARD, MOISTURE RESISTANT GYPSUM WALLBOARD, FIRE RATED GYPSUM WALL BOARD OR GYPSUM WALLBOARD, ACCORDING TO LOCATION AND FINISH REQ'D.
3. AT GWB PARTITIONS WITH AN INDICATED STC RATING, SET PERIMETER TRACKS IN 2 CONTINUOUS BEADS OF SEALANT AND SEAL ALL PENETRATIONS
4. PARTITION TYPE INDICATES GENERAL CONSTRUCTION. SEE ROOM FINISH SCHEDULE FOR INTERIOR FINISH OF WALLS.
5. COPE ALL PARTITIONS EXTENDING TO STRUCTURAL DECK NEATLY AROUND ALL PENETRATIONS, DUCTS, PIPES, BEAMS, JOISTS, ETC, AND SEAL,TIGHT.
6. ALL FIRE RATED WALLS SHALL BE CONSTRUCTED IN STRICT ACCORDANCE WITH THE UL DESIGN NUMBER INDICATED.
7. ALL PENETRATIONS IN FIRE RATED WALLS & SMOKESTOP WALLS ARE TO BE COMPLETELY SEALED TO MAINTAIN A RATED BARRIER FROM FLOOR TO DECK ABOVE.
8. OFFSET STUD ALIGNMENT IN PLAN LAYOUT AS REQUIRED FOR ALL OUTER-MOST LAYERS OF GWB TO ALIGN ON CORRIDOR SIDE OF WALLS, TYP.
9. WHERE WALL TYPE ABUTS ANOTHER WALL AS A CHASE, PROVIDE GWB ONLY ON THE VISIBLE FINISH SIDE UNLESS THIS CONFLICTS WITH THE FIRE RATED UL DESIGN TYPE.
10. SEE ARCHITECTURAL DETAIL SHEETS FOR UL DESIGNATED PENETRATION REQUIREMENTS

1 FIRE EXTINGUISHER DETAILS
SCALE: 3/4" = 1'-0"

NOTE: FIRE EXTINGUISHER CABINET SHALL BE RATED TO THE SAME LEVEL AS THE WALL IN WHICH IT IS INSTALLED

LONG & ASSOCIATES
architects | engineers, inc.
4525 South Manhattan Avenue, Tampa, FL 33611-2305
T:813.839.0506 F:813.839.4616 AA C001624 IB28 CGC1511025
www.longandassociates.com

THIS DOCUMENT IS COPYRIGHTED IN A PUBLISHED FORM. ALL RIGHTS ARE RESERVED. NO PART OF THIS DOCUMENT MAY BE REPRODUCED OR TRANSMITTED IN ANY FORM OR BY ANY MEANS, ELECTRONIC OR MECHANICAL, INCLUDING PHOTOCOPYING, RECORDING, OR BY ANY INFORMATION STORAGE AND RETRIEVAL SYSTEM WITHOUT THE PRIOR WRITTEN PERMISSION OF LONG & ASSOCIATES, INC.

HILLSBOROUGH COUNTY SHERIFF'S OFFICE

PINEBROOK BUILDING 4 INTERIOR RENOVATION

1220 - 1238 TECH BLVD.
TAMPA, FL 33619

Seal

CHRISTOPHER K. RAWLINS, A.I.A.
AR100384

No.	Date	Issues & Revisions

TO THE BEST OF THE ARCHITECT'S AND/OR ENGINEER'S KNOWLEDGE THESE PLANS AND SPECIFICATIONS COMPLY WITH THE APPLICABLE MINIMUM BUILDING CODES AND THE APPLICABLE FIRE-SAFETY STANDARDS

Phase: 100% CONSTRUCTION DRAWINGS
Drawn By: CHA
Checked By: CR
Job No: 19002
Date: SEPTEMBER 20, 2019
9/19/2019 5:08:15 PM

INTERIOR PARTITIONS AND FIRE EXTINGUISHER CABINET DETAILS

G0.4

PLUMBING FIXTURE CALCULATION

OCCUPANT LOAD = 288

288 / 2 = 144 MALE, 144 FEMALE

PER TABLE 403.1 FBC PLUMBING

		REQUIRED	
WATER CLOSETS MALE FEMALE	1 PER 25 FOR FIRST 50 THEN 1 PER 50 AFTER	7 TOTAL WATER CLOSETS	PROVIDE 8: 4 MALE 4 FEMALE
LAVATORIES MALE FEMALE	1 PER 40 FOR FIRST 80 THEN 1 PER 80 AFTER	5 TOTAL LAVATORIES	PROVIDE 6: 3 MALE 3 FEMALE
DRINKING FOUNTAINS	1 PER 100	3	
SERVICE SINK	1 IF < 15, NOT REQUIRED	1	

BUILDING CODE ANALYSIS NOTES (FBC 2017 6TH EDITION)

2017 FLORIDA BUILDING CODE, 6TH EDITION (FBC):
THIS CODE INCLUDES THE 2017 FLORIDA BUILDING, MECHANICAL, PLUMBING AND FUEL GAS VOLUMES. FURTHER SEE THE 2017 FBC BUILDING CHAPTER 35, MECHANICAL CHAPTER 15, PLUMBING CHAPTER 13 AND FUEL GAS CHAPTER 8 FOR OTHER REFERENCED CODES AND STANDARDS.

2017 FLORIDA FIRE PREVENTION CODE (FFPC):
THIS CODE ALSO INCLUDES THE FLORIDA VERSION OF NFPA 1 AND NFPA 101

2017 FLORIDA ACCESSIBILITY CODE FOR BUILDING CONSTRUCTION

1) CONSTRUCTION TYPE (FBC 602.2): TYPE II-B UNPROTECTED, UNSPRINKLED

2) BUILDING HEIGHT (FBC 504.3):
55' HEIGHT MAX
ACTUAL BUILDING HEIGHT: 20' - 0"
BUILDING AREA (FBC 506.2):
23,000 SF MAX
AREA INCREASE (FBC 506.2.1): 23,000 + 17,250 = 40,250 SF
ACTUAL BUILDING AREA: 39,816 SF
ACTUAL PROJECT AREA: 28,785 SF

3) FIRE RESISTANCE RATING (FBC TABLE 601):
TYPE II-B, UNPROTECTED, UNSPRINKLED
PRIMARY STRUCTURAL FRAME = 0 HOURS
BEARING WALLS = 0 HOURS
NON-BEARING WALLS = 0 HOURS
FLOOR CONSTRUCTION = 0 HOURS
ROOF CONSTRUCTION = 0 HOURS

4) OCCUPANCY GROUP "B" BUSINESS (FBC 304.1)
OCCUPANT LOAD (TABLE 1004.1.2): 100 GROSS SF PER PERSON
28,785 / 100 = 288 PERSONS

5) TRAVEL DISTANCE (TABLE 1017.2): 200'-0" MAX TRAVEL

6) CORRIDORS FIRE RATING REQUIRED (TABLE 1020.1): 1 HR. WHERE OCCUPANT LOAD > 30

7) (FBC 1020.1 EXCEPTION # 4) A FIRE-RESISTANCE RATING IS NOT REQUIRED FOR CORRIDORS IN AN OCCUPANCY IN GROUP B THAT IS A SPACE REQUIRING ONLY A SINGLE MEANS OF EGRESS COMPLYING WITH SECTION 1006.2
(TABLE 1006.2.1) **SPACES WITH ONE EXIT OR EXIT ACCESS DOORWAY**
GROUP B OCCUPANCY - MAXIMUM OCCUPANT LOAD OF SPACE = 49 OCCUPANTS

8) MINIMUM CORRIDOR WIDTH (TABLE 1020.2) = 44"

9) WALKING SURFACES ALONG ACCESSIBLE ROUTES:
36" MIN. CLEAR WIDTH (FAC 403.5.1)
WIDTH MAY BE REDUCED TO 32" FOR LENGTH UP TO 24" MAX.

10) SERVICE COUNTERS:
MUST BE MAX 36" HIGH FOR MIN. OF 36" LONG FOR PARALLEL APPROACH (FAC 904.4.1)

11) FOR ADDITIONAL LIFE SAFETY AND FIRE ALARM AND RELATED INFORMATION SEE ARCHITECTURAL FLOOR PLANS AND ELECTRICAL DRAWINGS

12) ROOM 213 = ASSEMBLY OCCUPANCY TYPE "A-3" (FBC 303.1.1, 303.1.2, 303.4)

13) REQUIRED SEPARATION OF OCCUPANCIES (TABLE 508.4)
(UNSPRINKLED) BUSINESS TO ASSEMBLY = 2 HOUR SEPARATION REQUIRED
(UNSPRINKLED) BUSINESS TO BUSINESS = NOT REQUIRED

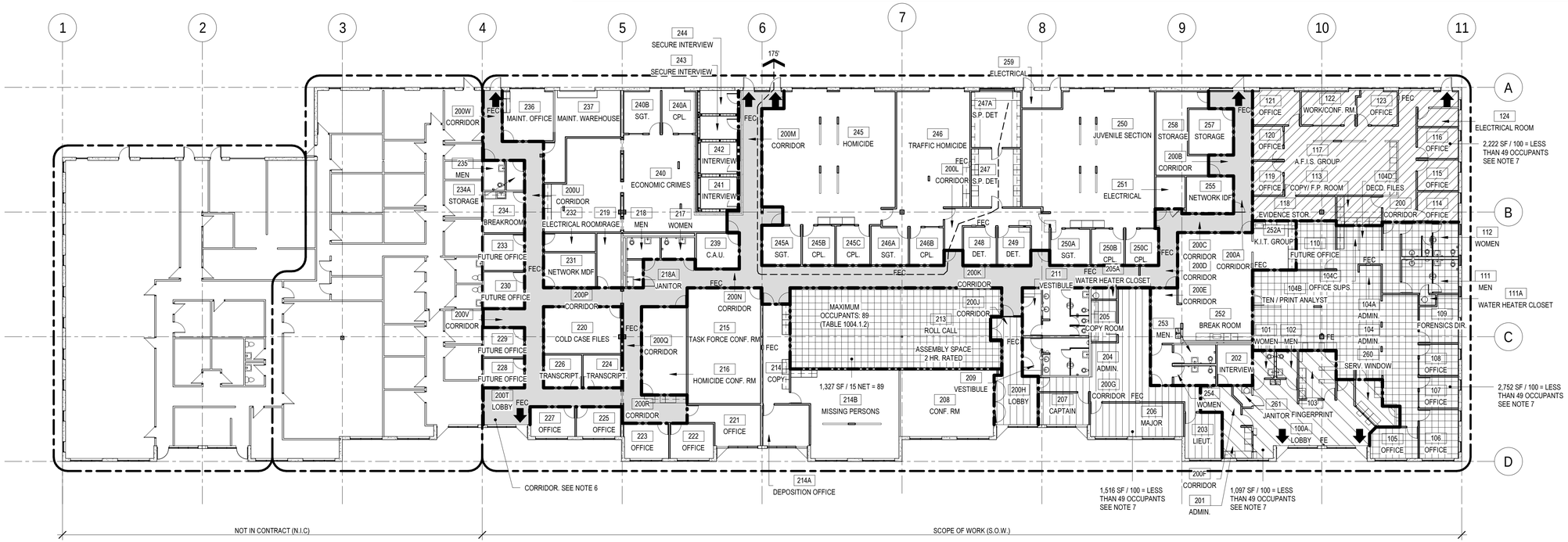

N (1) LIFE SAFETY PLAN
SCALE: 1/16" = 1'-0"
0' 8' 16' 32'

PORTABLE FIRE EXTINGUISHERS

1. OCCUPANCY:	ORDINARY HAZARD CLASS A
2. EXTINGUISHER:	TYPE: 2-A / 10-BC
3. PROJECT AREA:	28,785 SF
4. MAX SF PER EXTINGUISHER: 1500 (PER FBC TABLE 906.3.1)	
5. TOTAL REQUIRED:	20
6. TOTAL PROVIDED:	20

DRAWING LEGEND

- FEC — FIRE EXTINGUISHER CABINET
- FE — FIRE EXTINGUISHER
- EXIT / PRIMARY EGRESS
- SECONDARY EGRESS
- 1 HR. FIRE RATED WALL
- 2 HR. FIRE RATED WALL
- TRAVEL DISTANCE < 200' MAX

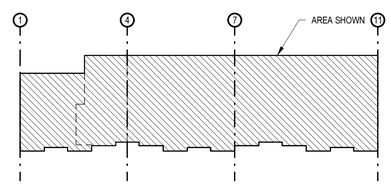

(A) KEY PLAN
SCALE: NTS

LONG & ASSOCIATES
architects | engineers, inc.
4525 South Manhattan Avenue, Tampa, FL 33611-2305
T:813.839.0506 F:813.839.4616 AAC0010424 IBPE CGC1511025
www.longandassociates.com

THIS DOCUMENT IS COPYRIGHTED IN A NOTICE FORM. THE INTERPRETATION OF DISTRIBUTION RESTRICTS EXPRESS WRITTEN CONSENT OF LONG & ASSOCIATES ARCHITECTS, ENGINEERS, INC. RESERVED

HILLSBOROUGH COUNTY SHERIFF'S OFFICE

PINEBROOK BUILDING 4 INTERIOR RENOVATION

1220 - 1238 TECH BLVD.
TAMPA, FL 33619

Seal

CHRISTOPHER K. RAWLINS, A.I.A.
AR 100384

No.	Date	Issues & Revisions

TO THE BEST OF THE ARCHITECT'S AND/OR ENGINEER'S KNOWLEDGE THESE PLANS AND SPECIFICATIONS COMPLY WITH THE APPLICABLE MINIMUM BUILDING CODES AND THE APPLICABLE FIRE-SAFETY STANDARDS

Phase: 100% CONSTRUCTION DRAWINGS
Drawn By: CKR
Checked By: AML
Job No: 19002
Date: SEPTEMBER 20, 2019
9/19/2019 5:08:20 PM

LIFE SAFETY PLANS & CODE ANALYSIS NOTES

LS1.1

NOTES

1. AREA OF IMPACT IS: 28,785 SF
2. TOTAL BUILDING SF IS: 39,816 SF
3. PROJECT IS TO BE COMPLETED IN 1 PHASE
4. CONTRACTOR LAY DOWN AND STAGING IS TO BE COORDINATED WITH OWNER. SEE SHEET G0.1

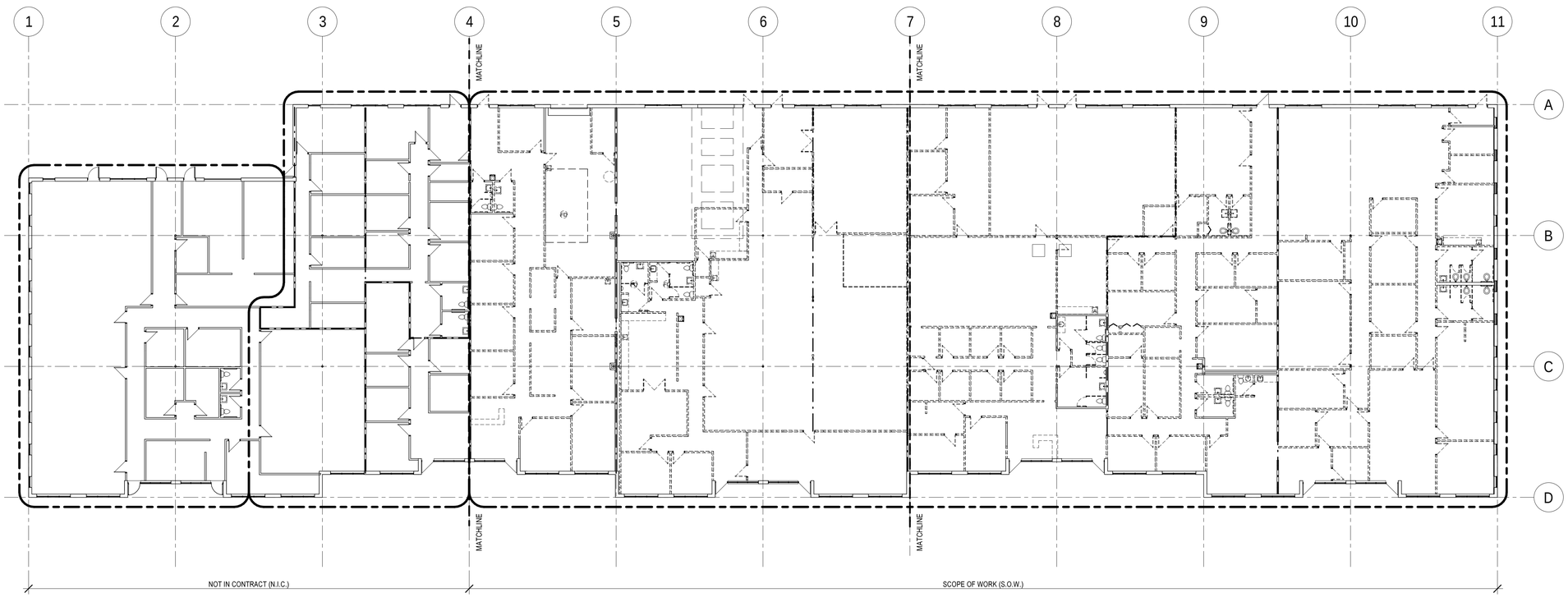

N 1 OVERALL DEMOLITION FLOOR PLAN

SCALE: 1/16" = 1'-0"

0' 8' 16' 32'

EXISTING DOOR TO BE DEMOLISHED

EXISTING WALL TO REMAIN

EXISTING WALL TO BE DEMOLISHED

EXISTING DOOR TO REMAIN

EXISTING COLUMN TO REMAIN

EXISTING 1HR FIRE RATED WALL

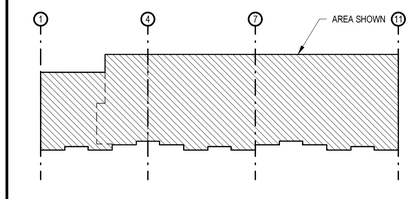

A KEY PLAN

SCALE: NTS

LONG & ASSOCIATES
architects | engineers, inc.
4525 South Manhattan Avenue, Tampa, FL 33611-2305
T:813.839.0506 F:813.839.4616 AAC0001624 IB28 CGC1511025
www.longandassociates.com

THIS DOCUMENT IS COPYRIGHT LONG & ASSOCIATES ARCHITECTS | ENGINEERS, INC. ALL RIGHTS RESERVED. REPRODUCTION OR DISTRIBUTION WITHOUT EXPRESS WRITTEN CONSENT OF LONG & ASSOCIATES IS PROHIBITED. ALL RIGHTS RESERVED.

HILLSBOROUGH COUNTY SHERIFF'S OFFICE

PINEBROOK BUILDING 4 INTERIOR RENOVATION

1220 - 1238 TECH BLVD.
TAMPA, FL 33619

Seal

CHRISTOPHER K. RAWLINS, A.I.A.
AR100384

No.	Date	Issues & Revisions

TO THE BEST OF THE ARCHITECT'S AND/OR ENGINEER'S KNOWLEDGE THESE PLANS AND SPECIFICATIONS COMPLY WITH THE APPLICABLE MINIMUM BUILDING CODES AND THE APPLICABLE FIRE-SAFETY STANDARDS

Phase: 100% CONSTRUCTION DRAWINGS
Drawn By: JP
Checked By: CKR
Job No: 19002
Date: SEPTEMBER 20, 2019
9/19/2019 5:07:53 PM

OVERALL DEMOLITION FLOOR PLAN

DA0.1

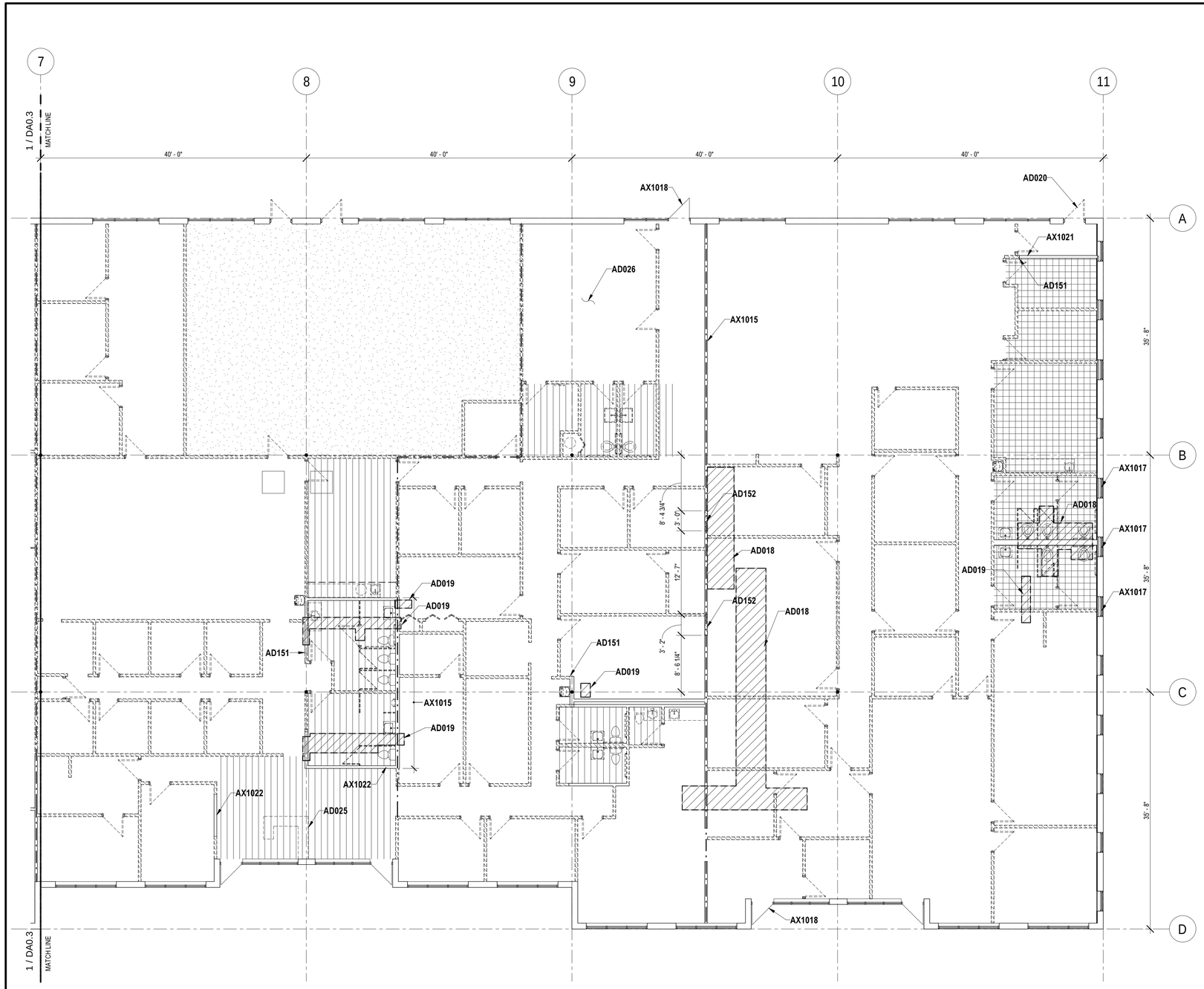

N

1 ENLARGED DEMOLITION FLOOR PLAN

SCALE: 1/8" = 1'-0"

0' 4' 8' 16'

DEMOLITION GENERAL NOTES

1. CAREFULLY DEMOLISH AND REMOVE WALLS, DOORS, FRAMES, CASEWORK, PLUMBING, FLOOR FINISHES, SHELVING, CABINETS, FIXTURES, VINYL BASE, METAL CAGE ENCLOSURE, AND ACOUSTIC CEILING GRID AND TILES AS SHOWN. TAKE NOTE WHICH PORTIONS OF WALLS REMAIN AND PROTECT AS REQUIRED. PROTECT AND MAINTAIN ALL STRUCTURAL BUILDING COLUMNS AS REQUIRED, TYPICAL THROUGHOUT.

KEYNOTE LEGEND

NO.	DESCRIPTION
AD018	SAW CUT FLOOR FOR THE INSTALLATION OF NEW SANITARY PIPES. FIELD LOCATE ALL SANITARY PIPE PRIOR TO CUTTING SLAB.
AD019	SAW CUT FLOOR FOR THE INSTALLATION OF THE FLOOR DRAINS. FIELD LOCATE ALL SANITARY PIPE PRIOR TO CUTTING SLAB.
AD020	CAREFULLY REMOVE EXISTING HOLLOW METAL DOOR AND FRAME. SEE NEW WORK
AD025	CAREFULLY REMOVE EXISTING DESK AND COUNTERTOP
AD026	EXISTING FLOOR BOXES ARE TO BE REMOVED AND CAPPED LEVEL WITH CONCRETE SLAB. PREPARE FOR NEW WORK, TYP. THROUGHOUT.
AD151	CAREFULLY REMOVE PORTION OF WALL AS SHOWN. LEAVE CLEAN EDGE IN PREPARATION OF NEW WORK, TYPICAL THROUGHOUT.
AD152	CAREFULLY REMOVE PORTION OF FIRE RATED WALL IN PREPARATION OF NEW WORK. ALL NEW PENETRATIONS IN EXISTING FIRE RATED WALLS ARE TO BE PROPERLY SEALED
AX1015	EXISTING FIRE RATED WALL. SEE NEW WORK FOR FIRE RATED PARTITION LOCATIONS. ALL PENETRATIONS ARE TO BE PROPERLY REPAIRED AND SEALED WHERE FIRE RATING EXISTS IN NEW WORK
AX1017	EXISTING GYPSUM BOARD OVER WINDOW TO REMAIN. PATCH, PRIME AND PAINT AS NEEDED.
AX1018	EXISTING STOREFRONT DOOR TO REMAIN. PROTECT FROM DAMAGE, TYP.
AX1021	EXISTING OVERHEAD DOOR TO REMAIN. PROTECT FROM DAMAGE
AX1022	EXISTING WALL TO REMAIN. PROTECT FROM DAMAGE

DRAWING LEGEND

EXISTING DOOR TO BE DEMOLISHED

EXISTING WALL TO REMAIN

EXISTING WALL TO BE DEMOLISHED

EXISTING DOOR TO REMAIN

EXISTING COLUMN TO REMAIN

EXISTING 1HR FIRE RATED WALL

EXISTING FLOOR FINISHES

EXISTING ROLLED CARPET TO BE REMOVED

EXISTING CERAMIC TILE TO BE REMOVED

EXISTING VCT TO BE REMOVED

EXPOSED CONCRETE TO REMAIN

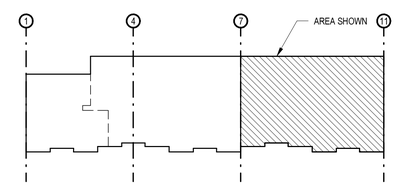

A KEY PLAN

SCALE: NTS

LONG & ASSOCIATES
architects | engineers, inc.
4525 South Manhattan Avenue, Tampa, FL 33611-2305
T:813.839.0206 F:813.839.4616 AAC0010424 IB28 CGC1511025
www.longandassociates.com

THIS DOCUMENT IS COPYRIGHTED IN A LIMITED FORM. OWNERSHIP OF DOCUMENTS OF THIS FIRM IS RETAINED BY LONG & ASSOCIATES. REPRODUCTION OF DOCUMENTS FOR OTHER THAN PERMITTING AND CONSTRUCTION PURPOSES WITHOUT WRITTEN CONSENT OF LONG & ASSOCIATES IS PROHIBITED. ALL RIGHTS RESERVED.

HILLSBOROUGH COUNTY SHERIFF'S OFFICE

PINEBROOK BUILDING 4 INTERIOR RENOVATION

1220 - 1238 TECH BLVD.
TAMPA, FL 33619

Seal

CHRISTOPHER K. RAWLINS, A.I.A.
AR100384

No.	Date	Issues & Revisions

TO THE BEST OF THE ARCHITECT'S AND/OR ENGINEER'S KNOWLEDGE THESE PLANS AND SPECIFICATIONS COMPLY WITH THE APPLICABLE MINIMUM BUILDING CODES AND THE APPLICABLE FIRE-SAFETY STANDARDS

Phase: 100% CONSTRUCTION DRAWINGS
Drawn By: JP
Checked By: CKR
Job No: 19002
Date: SEPTEMBER 20, 2019
9/19/2019 5:07:56 PM

ENLARGED DEMOLITION FLOOR PLAN

DA0.2

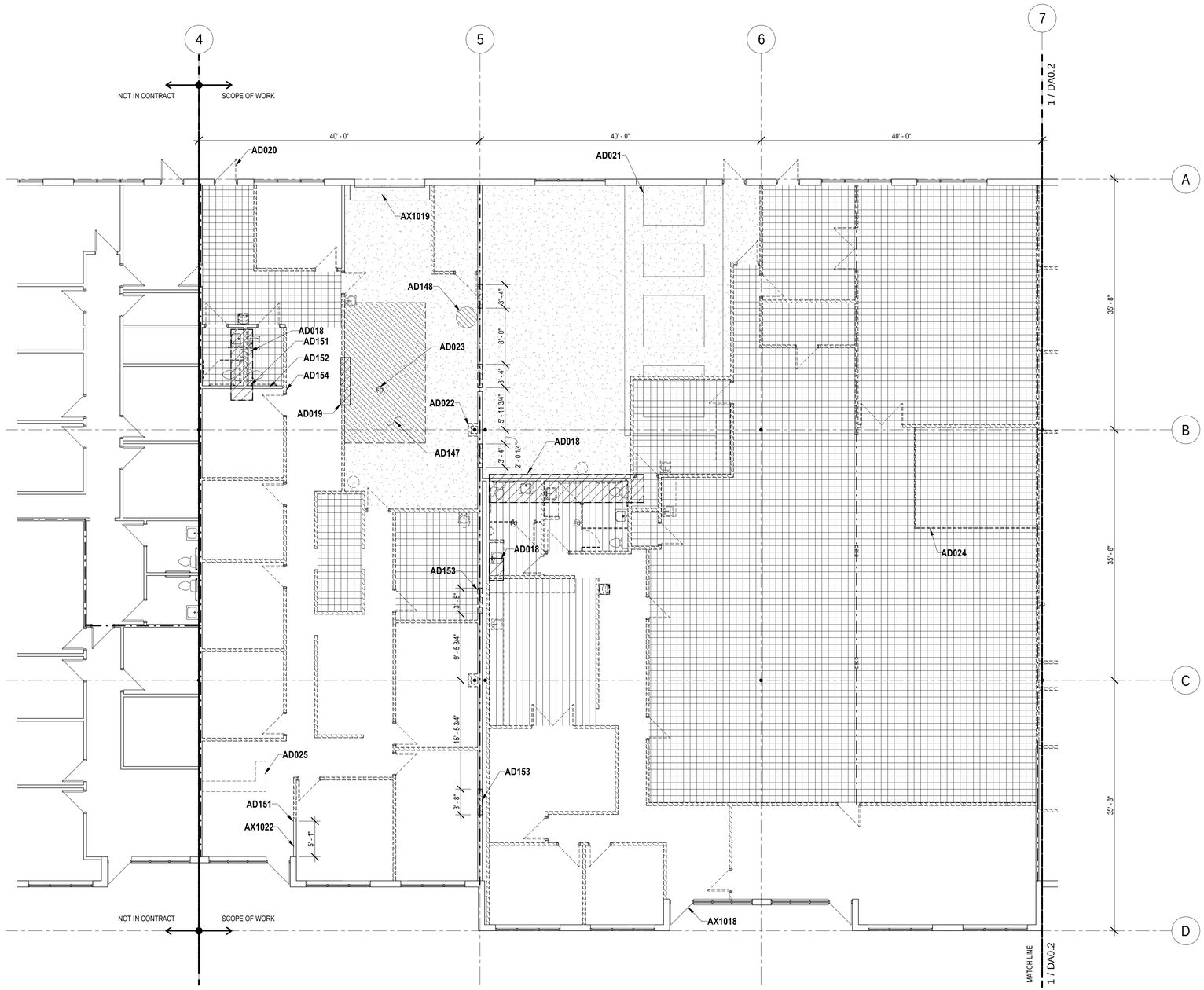

N

1 ENLARGED DEMOLITION FLOOR PLAN

SCALE: 1/8" = 1'-0"

0' 4' 8' 16'

DEMOLITION GENERAL NOTES

1. CAREFULLY DEMOLISH AND REMOVE WALLS, DOORS, FRAMES, CASEWORK, PLUMBING, FLOOR FINISHES, SHELVING, CABINETS, FIXTURES, VINYL BASE, METAL CAGE ENCLOSURE, AND ACOUSTIC CEILING GRID AND TILES AS SHOWN. TAKE NOTE WHICH PORTIONS OF WALLS REMAIN AND PROTECT AS REQUIRED. PROTECT AND MAINTAIN ALL STRUCTURAL BUILDING COLUMNS AS REQUIRED, TYPICAL THROUGHOUT.

KEYNOTE LEGEND

NO.	DESCRIPTION
AD018	SAW CUT FLOOR FOR THE INSTALLATION OF NEW SANITARY PIPES. FIELD LOCATE ALL SANITARY PIPE PRIOR TO CUTTING SLAB.
AD019	SAW CUT FLOOR FOR THE INSTALLATION OF THE FLOOR DRAINS. FIELD LOCATE ALL SANITARY PIPE PRIOR TO CUTTING SLAB.
AD020	CAREFULLY REMOVE EXISTING HOLLOW METAL DOOR AND FRAME. SEE NEW WORK
AD021	EXISTING FLOOR SLAB TO BE CAREFULLY SAWCUT AND REMOVED IN PREPARATION OF NEW WORK. SEE STRUCTURAL DWGS FOR DETAILS
AD022	CAREFULLY DEMOLISH COLUMN WRAP. PROTECT EXISTING STRUCTURAL COLUMN FROM DAMAGE, TYP.
AD023	EXISTING FLOOR DRAIN TO BE CAREFULLY REMOVED. SEE PLUMBING DWGS FOR DETAILS, TYP.
AD024	CAREFULLY REMOVE EXISTING METAL CAGE
AD025	CAREFULLY REMOVE EXISTING DESK AND COUNTERTOP
AD147	CAREFULLY SAW CUT AND REMOVE RAISED CONCRETE FLOOR. POUR BACK TO MATCH EXISTING FLOOR ELEVATION
AD148	CAREFULLY SAW CUT AND REMOVE EXISTING CONCRETE PAD. POUR BACK TO MATCH EXISTING FLOOR ELEVATION
AD151	CAREFULLY REMOVE PORTION OF WALL AS SHOWN. LEAVE CLEAN EDGE IN PREPARATION OF NEW WORK, TYPICAL THROUGHOUT.
AD152	CAREFULLY REMOVE PORTION OF FIRE RATED WALL IN PREPARATION OF NEW WORK. ALL NEW PENETRATIONS IN EXISTING FIRE RATED WALLS ARE TO BE PROPERLY SEALED
AD153	EXISTING CMU WALL TO REMAIN. CAREFULLY SAW CUT OPENINGS AS REQUIRED ALONG GRID LINE 5. SEE NEW WORK FOR DETAILS.
AD154	
AX1018	EXISTING STOREFRONT DOOR TO REMAIN. PROTECT FROM DAMAGE, TYP.
AX1019	EXISTING OVERHEAD DOOR TO REMAIN. PROTECT FROM DAMAGE, TYP.
AX1022	EXISTING WALL TO REMAIN. PROTECT FROM DAMAGE

DRAWING LEGEND

- EXISTING DOOR TO BE DEMOLISHED
- EXISTING WALL TO REMAIN
- EXISTING WALL TO BE DEMOLISHED
- EXISTING DOOR TO REMAIN
- EXISTING COLUMN TO REMAIN
- EXISTING 1HR FIRE RATED WALL

EXISTING FLOOR FINISHES

- EXISTING ROLLED CARPET TO BE REMOVED
- EXISTING CERAMIC TILE TO BE REMOVED
- EXISTING VCT TO BE REMOVED
- EXPOSED CONCRETE TO REMAIN

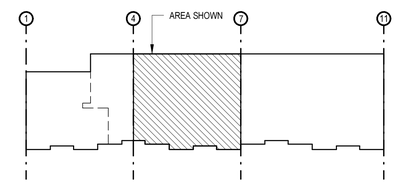

A KEY PLAN

SCALE: NTS

LONG & ASSOCIATES
architects | engineers, inc.
4525 South Manhattan Avenue, Tampa, FL 33611-2305
T:813.839.0206 F:813.839.4616 AAC001624 IB28 CGC1511025
www.longandassociates.com

THE DOCUMENT IS COPYRIGHTED IN A LIMITED FORM. UNAUTHORIZED DISTRIBUTION OR REPRODUCTION IS PROHIBITED WITHOUT EXPRESS WRITTEN CONSENT OF LONG & ASSOCIATES. ALL RIGHTS RESERVED.

HILLSBOROUGH COUNTY SHERIFF'S OFFICE

PINEBROOK BUILDING 4 INTERIOR RENOVATION

1220 - 1238 TECH BLVD.
TAMPA, FL 33619

Seal

CHRISTOPHER K. RAWLINS, A.I.A.
AR100384

No.	Date	Issues & Revisions

TO THE BEST OF THE ARCHITECT'S AND/OR ENGINEER'S KNOWLEDGE THESE PLANS AND SPECIFICATIONS COMPLY WITH THE APPLICABLE MINIMUM BUILDING CODES AND THE APPLICABLE FIRE-SAFETY STANDARDS

Phase: 100% CONSTRUCTION DRAWINGS
Drawn By: JP
Checked By: CKR
Job No: 19002
Date: SEPTEMBER 20, 2019
9/19/2019 5:07:59 PM

ENLARGED DEMOLITION FLOOR PLAN

DA0.3

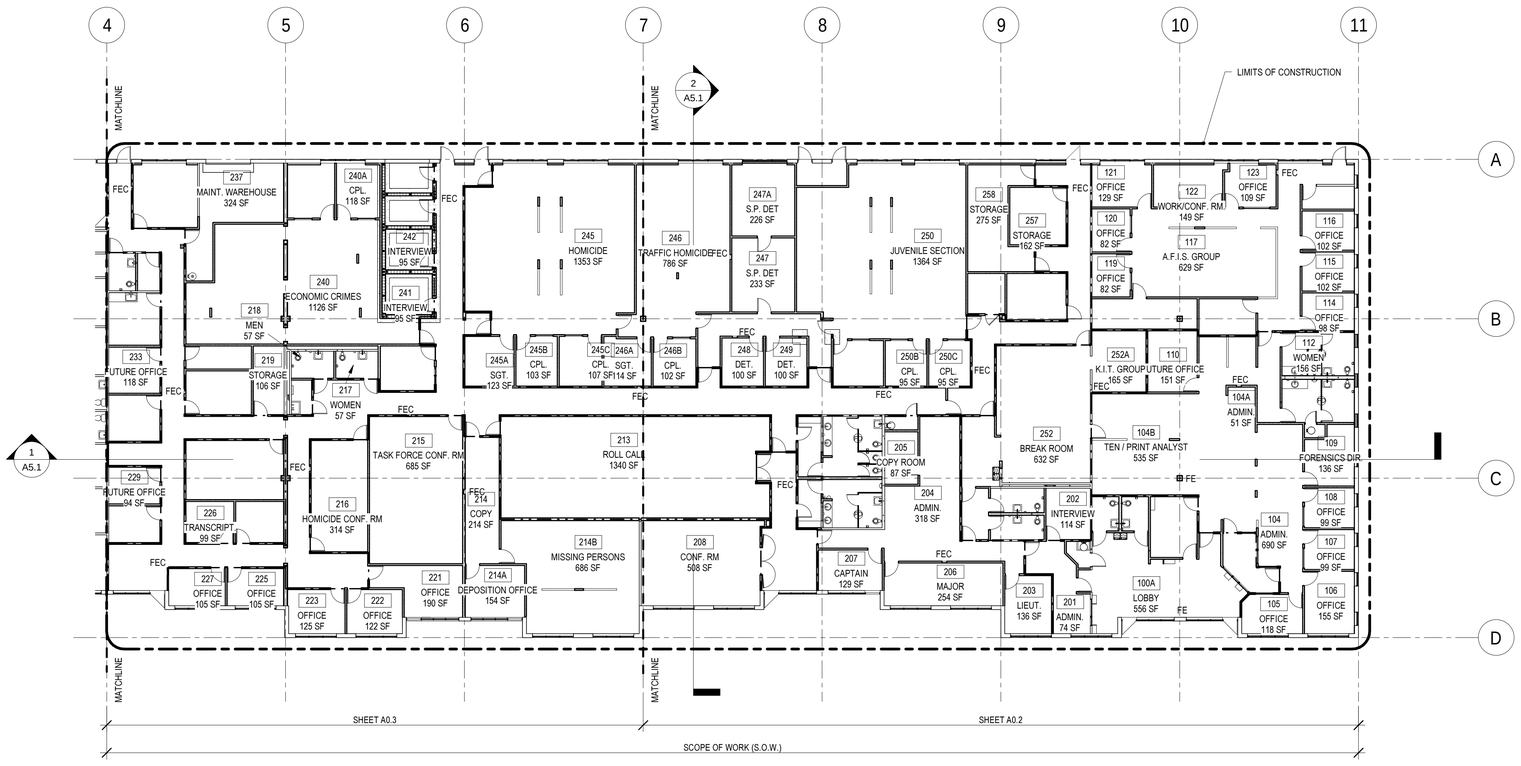

N

1 OVERALL WORK AREA FLOOR PLAN

SCALE: 1/16" = 1'-0"

0' 8' 16' 32'

NOTES

1. LIMITS OF CONSTRUCTION IS TO BE CONTAINED TO WITHIN GRID LINES 4 &11.

2. EXTERIOR WORK IS LIMITED TO REMOVING & REPLACED EXTERIOR HOLLOW METAL DOOR AND FRAMES, MINOR ROOF WORK & REMOVING AND RESEALING EXTERIOR JOINTS WITHIN LIMITS OF CONSTRUCTION.

DRAWING LEGEND

- NEW DOOR
- NEW WALL
- EXISTING WALL TO REMAIN
- 1 HR FIRE RATED WALL
- 2 HR FIRE RATED WALL
- EXISTING DOOR TO REMAIN
- 101 DOOR TAG
- A WINDOW TAG
- A WALL TAG
- 101 EQUIPMENT / FURNITURE TAG

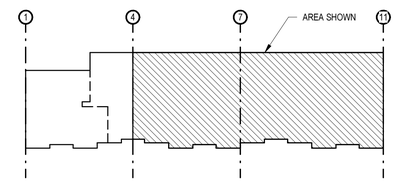

A KEY PLAN

SCALE: NTS

LONG & ASSOCIATES
architects | engineers, inc.
4525 South Manhattan Avenue, Tampa, FL 33611-2305
T:813.839.0506 F:813.839.4616 AAC0001624 IB28 CGC1511025
www.longandassociates.com

THIS DOCUMENT IS COPYRIGHT PROTECTED & IS THE PROPERTY OF LONG & ASSOCIATES. USE FOR CONSTRUCTION WITHOUT THE EXPRESS WRITTEN CONSENT OF LONG & ASSOCIATES IS PROHIBITED. ALL RIGHTS RESERVED.

HILLSBOROUGH COUNTY SHERIFF'S OFFICE

PINEBROOK BUILDING 4 INTERIOR RENOVATION

1220 - 1238 TECH BLVD.
TAMPA, FL 33619

Seal

CHRISTOPHER K. RAWLINS, A.I.A.
AR100384

No.	Date	Issues & Revisions

TO THE BEST OF THE ARCHITECT'S AND/OR ENGINEER'S KNOWLEDGE THESE PLANS AND SPECIFICATIONS COMPLY WITH THE APPLICABLE MINIMUM BUILDING CODES AND THE APPLICABLE FIRE-SAFETY STANDARDS

Phase: 100% CONSTRUCTION DRAWINGS
Drawn By: JP
Checked By: CKR
Job No: 19002
Date: SEPTEMBER 20, 2019
9/19/2019 5:06:29 PM

OVERALL WORK AREA FLOOR PLAN

A0.1

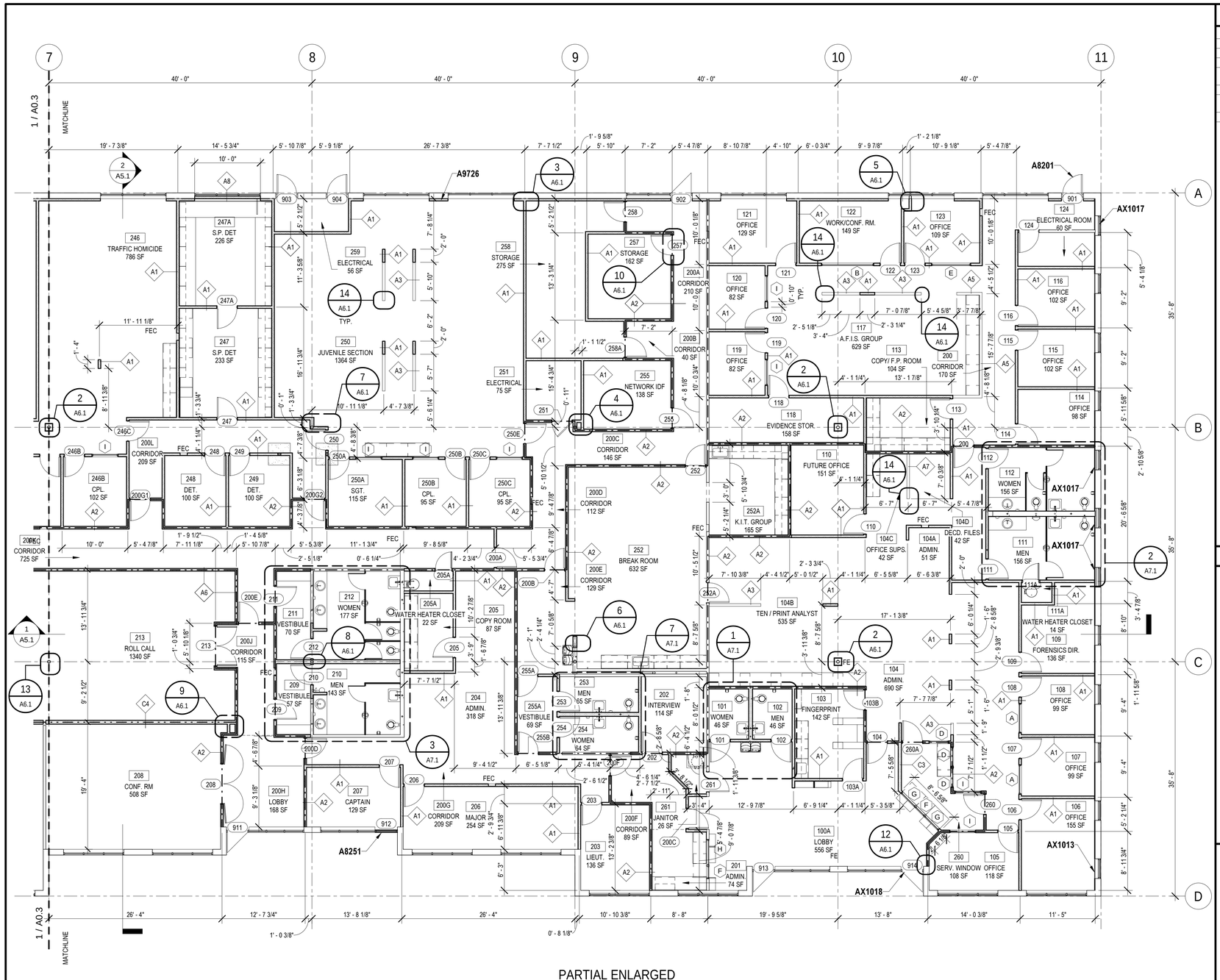

PARTIAL ENLARGED FLOOR PLAN

SCALE: 1/8" = 1'-0"

0' 4' 8' 16'

N

KEYNOTE LEGEND

NO.	DESCRIPTION
A8201	PROVIDE NEW EXTERIOR HOLLOW METAL DOOR AND FRAME.
A8251	EXISTING EXTERIOR DOOR TO REMIAN. CLOSE AND LOCK TO PREVENT EGRESS.
A9726	FUR OUT EXISTING EXPOSED TILT WALL WITH 5/8" GYP. BOARD ON 3-5/8" METAL STUDS AT 16" O.C. TO 4" ABOVE CEILING. TYPICAL WITHIN OFFICES
AX1013	EXISTING EXTERIOR WINDOW TO REMAIN, PROTECT FROM DAMAGE, TYP.
AX1017	EXISTING GYPSUM BOARD OVER WINDOW TO REMAIN. PATCH, PRIME AND PAINT AS NEEDED.
AX1018	EXISTING STOREFRONT DOOR TO REMAIN. PROTECT FROM DAMAGE, TYP.

DRAWING LEGEND

- NEW DOOR
- NEW WALL
- EXISTING WALL TO REMAIN
- 1 HR FIRE RATED WALL
- 2 HR FIRE RATED WALL
- EXISTING DOOR TO REMAIN
- 101 DOOR TAG
- A WINDOW TAG
- A WALL TAG
- 101 EQUIPMENT / FURNITURE TAG

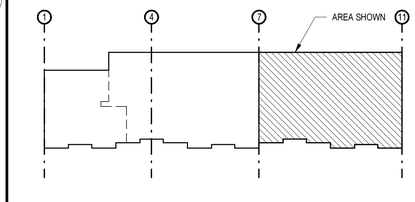

A KEY PLAN

SCALE: NTS

LONG & ASSOCIATES
architects | engineers, inc.
4525 South Manhattan Avenue, Tampa, FL 33611-2305
T:813.839.0506 F:813.839.4616 AAC0001624 IBDR CGC1511025
www.longandassociates.com

THIS DOCUMENT IS COPYRIGHTED IN A LIMITED LICENSE GRANTED TO ESTIMATORS, VETERINARIANS AND REGULATORY AGENCIES. ALL OTHER USES PROHIBITED WITHOUT WRITTEN CONSENT OF LONG & ASSOCIATES. ALL RIGHTS RESERVED.

HILLSBOROUGH COUNTY SHERIFF'S OFFICE

PINEBROOK BUILDING 4 INTERIOR RENOVATION

1220 - 1238 TECH BLVD.
TAMPA, FL 33619

Seal

CHRISTOPHER K. RAWLINS, A.I.A.
AR 100384

No.	Date	Issues & Revisions

TO THE BEST OF THE ARCHITECT'S AND/OR ENGINEER'S KNOWLEDGE THESE PLANS AND SPECIFICATIONS COMPLY WITH THE APPLICABLE MINIMUM BUILDING CODES AND THE APPLICABLE FIRE-SAFETY STANDARDS

Phase: 100% CONSTRUCTION DRAWINGS
Drawn By: JP
Checked By: CKR
Job No: 19002
Date: SEPTEMBER 20, 2019
9/19/2019 5:06:36 PM

PARTIAL ENLARGED FLOOR PLAN

A0.2

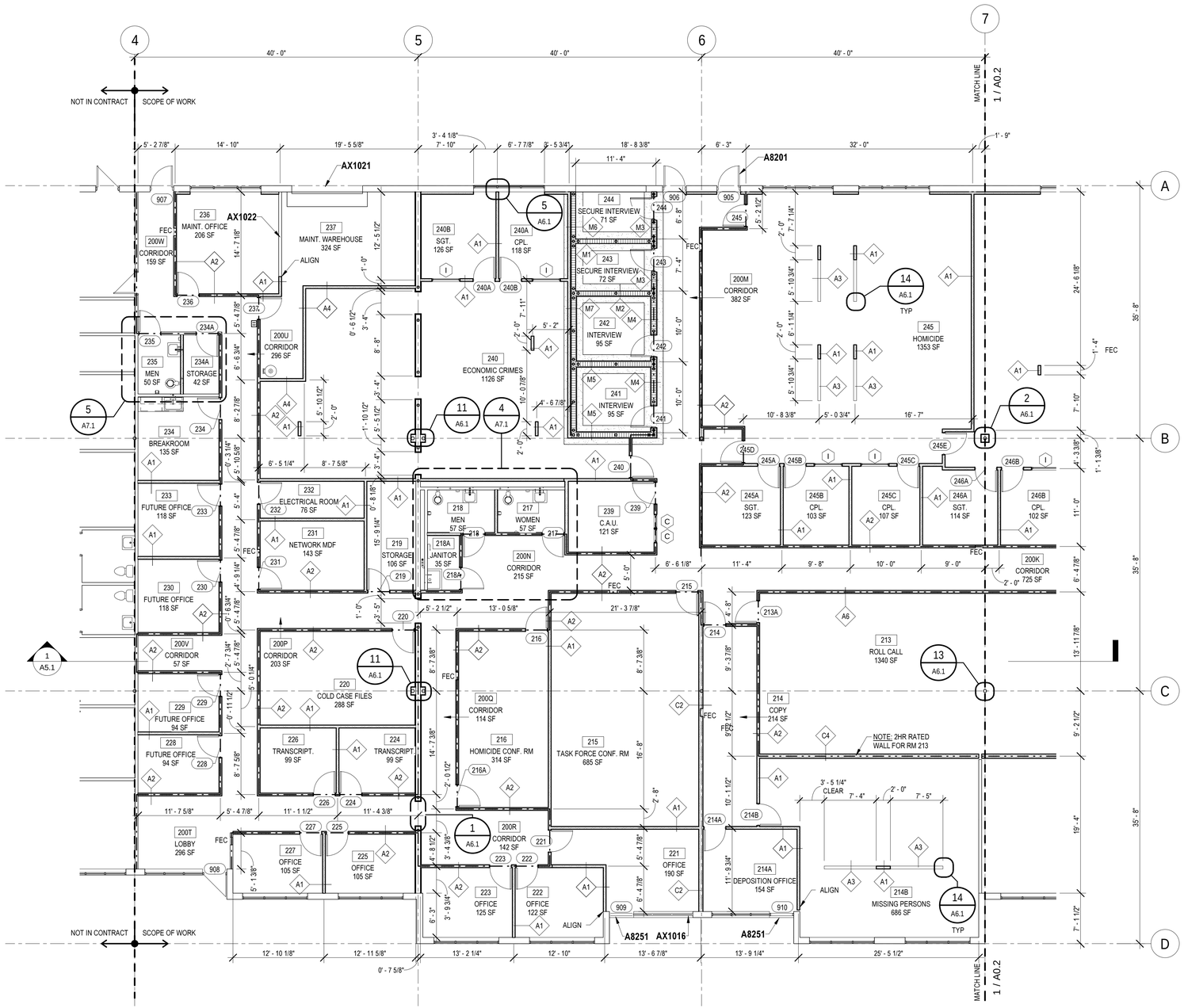

N

1 PARTIAL ENLARGED FLOOR PLAN

SCALE: 1/8" = 1'-0"

0' 4' 8' 16'

KEYNOTE LEGEND

NO.	DESCRIPTION
A8201	PROVIDE NEW EXTERIOR HOLLOW METAL DOOR AND FRAME.
A8251	EXISTING EXTERIOR DOOR TO REMIAN. CLOSE AND LOCK TO PREVENT EGRESS.
AX1016	EXISTING STOREFRONT WINDOWS TO REMAIN. PROTECT FROM DAMAGE, TYP.
AX1021	EXISTING OVERHEAD DOOR TO REMAIN. PROTECT FROM DAMAGE
AX1022	EXISTING WALL TO REMAIN. PROTECT FROM DAMAGE

DRAWING LEGEND

- NEW DOOR
- NEW WALL
- EXISTING WALL TO REMAIN
- 1 HR FIRE RATED WALL
- 2 HR FIRE RATED WALL
- EXISTING DOOR TO REMAIN
- 101 DOOR TAG
- A WINDOW TAG
- A WALL TAG
- 101 EQUIPMENT / FURNITURE TAG

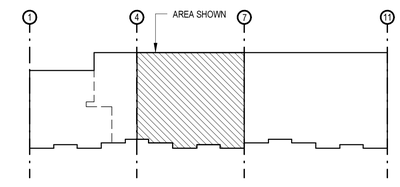

A KEY PLAN

SCALE: NTS

LONG & ASSOCIATES
architects | engineers, inc.
4525 South Manhattan Avenue, Tampa, FL 33611-2305
T:813.839.0506 F:813.839.4616 AAC001624 IBDB CGC1511025
www.longandassociates.com

THIS DOCUMENT IS COPYRIGHTED IN A NOTE TO CLIENT. OWNERSHIP OF DOCUMENTS IS RETAINED BY LONG & ASSOCIATES. REPRODUCTION OF THIS DOCUMENT WITHOUT EXPRESS WRITTEN CONSENT OF LONG & ASSOCIATES IS PROHIBITED. ALL RIGHTS RESERVED.

HILLSBOROUGH COUNTY SHERIFF'S OFFICE

PINEBROOK BUILDING 4 INTERIOR RENOVATION

1220 - 1238 TECH BLVD.
TAMPA, FL 33619

Seal

CHRISTOPHER K. RAWLINS, A.I.A.
AR100384

No.	Date	Issues & Revisions

TO THE BEST OF THE ARCHITECT'S AND/OR ENGINEER'S KNOWLEDGE THESE PLANS AND SPECIFICATIONS COMPLY WITH THE APPLICABLE MINIMUM BUILDING CODES AND THE APPLICABLE FIRE-SAFETY STANDARDS

Phase: 100% CONSTRUCTION DRAWINGS
Drawn By: JP
Checked By: CKR
Job No: 19002
Date: SEPTEMBER 20, 2019
9/19/2019 5:06:42 PM

PARTIAL ENLARGED FLOOR PLAN

A0.3

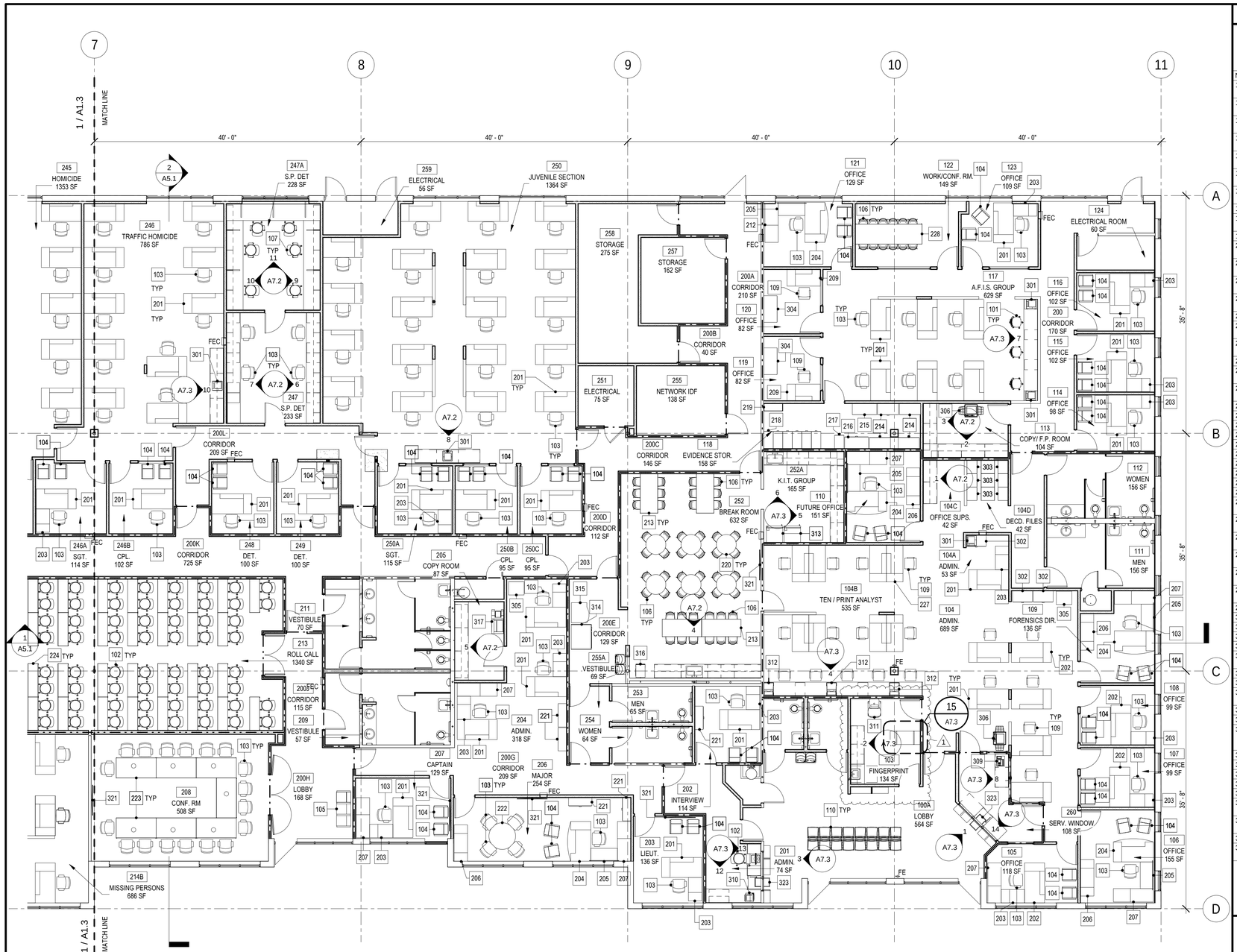

N

1 PARTIAL ENLARGED FURNITURE PLAN

SCALE: 1/8" = 1'-0"

0' 4' 8' 16'

GENERAL EQUIPMENT / FUNITURE SCHEDULE

ITEM STATUS LEGEND
A – PROVIDED BY CONTRACTOR, INSTALLED BY CONTRACTOR
B – PROVIDED BY OWNER, INSTALLED BY CONTRACTOR
C – PROVIDED BY OWNER, INSTALLED BY OWNER

NO.	STATUS	QTY	DESCRIPTION	COMMENTS
101	C	3	Draftsman_Chair__Laboratory_Chair_10948: STANDARD	
102	C	89	Steelcase Turnstone - Jack - Stool - Swivel Only Mechanism: Armless	
103	C	202	Steelcase - Seating - Siento Design Package: High Back Executive Chair	
104	C	80	Steelcase Health - Malibu - Seating - Tandem Chair: 1 Seat - Open Back, Open Arm	
105	C	1	Steelcase Health - Malibu - Seating - Tandem Chair: 3 Seats - Open Back, Open Arm	
106	C	60	Furniture_Chair_IconsOfDenmark_NamNam_ClassicChair: 1	
107	C	6	Steelcase Turnstone - Jack - Stool - Swivel Only Mechanism: Height Adjustable T Arm	
108	A	2	Locker_Room_Bench_3_-_739_2895: 5' Long	
109	C	21	Steelcase - Seating - Protégé 433 Series - Work Chair: Soft Arm Cap	
110	A	4	seats_4182: seats_4182	
201	C	126	Steelcase - Garland - Desk - Single Pedestal: Right - 36" D x 72" W	
202	C	7	Steelcase - Garland - Desk - Single Pedestal: Left - 36" D x 72" W	
203	C	36	Steelcase - Garland - Desk - Return: Right - 24" D x 42" W	
204	C	5	Steelcase - Garland - Desk - Single Pedestal: Left - 36" D x 72" W - Bow	
205	C	5	Steelcase - Garland - Bridge: Straight - 48" W	
206	C	4	Steelcase - Garland - Full Storage Credenza - Pedestal and Lateral File: 66" W	
207	C	9	Steelcase - Garland - Kneespace Credenza - Lateral File: Right - 72" W	
208	C	17	Cabinet-File 5 Drawer: 36" x 18" Lat.	
209	C	13	Steelcase - Garland - Desk - Single Pedestal: Left - 30" D x 60" W	
212	C	1	Steelcase - Garland - Kneespace Credenza - Lateral File: Left - 72" W	
213	C	4	12_38_ht_180x80_cm: Colour - (Birch) 36x84	
214	C	4	Cabinet-File 5 Drawer: 38"x20" Homicide Cabinet	
215	C	1	Cabinet-File 5 Drawer: 44"x20" Homicide Folders	
216	C	1	Cabinet-File 5 Drawer: 43"x21" Laten Section Docs	
217	C	1	Cabinet-File 5 Drawer: 24"x17" Fingerprint Cabinet	
218	C	6	Cabinet-File 5 Drawer: 31" x 17"	
219	C	1	Book_Shelf_767: Book_Shelf_767	
220	C	6	COALESSE_E-TABLE_-_Round_Table_8776: 36"	
221		5	Cabinet-File 5 Drawer: 42" x 15" Lat.	
222	C	1	COALESSE_E-TABLE_-_Round_Table_8776: 48"	
223	C	8	Furniture_Table_IconsOfDenmark_Kant_MeetingTable: W36x72Lx30H	
224	C	44	Furniture_Table_IconsOfDenmark_Kant_MeetingTable: W18x60Lx30H	
225	C	3	Furniture_Table_IconsOfDenmark_Kant_MeetingTable: W2400xD1200xH740mm	
226	C	2	Furniture_Table_IconsOfDenmark_Kant_MeetingTable: W36x96Lx30H	
227	C	8	Steelcase - Garland - Desk - Single Pedestal: Left - 30" D x 66" W	
228	C	1	Furniture_Table_IconsOfDenmark_Kant_MeetingTable: W36x120Lx30H 2	
229		6	Chrome_Stacking_Chair_7280: STANDARD	
301	C	8	Laser_Printer_2-Bins_14511: 1	
302	C	3	Cabinet-File 2 Drawer: 36" x 18" 2dwr Lateral	
303	C	6	Cabinet-File 5 Drawer: 24" x 18"	
304		6	Cabinet-File 5 Drawer: 36x24 Lateral	
305		2	F2550 - Shredder, Paper Heavy Duty: F2550 - Shredder, Paper Heavy Duty	
306	C	2	Copier_311: Copier_311	
309	C	1	Cash_Register-POS_4281: Cash_Register-POS_4281	
310	C	1	HP_Laser_Printer_-_Hewlett_Packard_DeskJet_2200_3707: 1	
311	C	1	Ultrasound_Machine_6885: Ultrasound_Machine_6885	
312	C	3	Dell_Color_Laser_Printer_5110cn_3303: 1	
313	C	2	Kitchen_Refrigerator-Kenmore-Top_Freezer_Refrigerator_with_Ice_Maker-18_cu_ft: 18 cu.ft. Top Freezer Refrigerator - White	
314	C	1	Vending_Machine_-_Snacks_372: 1	
315	C	1	Vending_Machine_-_Soda_371: Beverage Dispenser	
316	C	1	Ice_Machine_7127: Ice_Machine_7127	
317	C	4	Copier_309: Copier_309	
318	C	7	Book_Shelf_775: Book_Shelf_775	
319	C	13	downloadobjectfile?id=73a9ff1b-8831-4b40-821a-18a4f8c12341: 2 Dr Metal Cabinet 7'H	
321	C	7	Samsung_6_series_smartTV__Television__TV_13081: 60" ES6305U	
322	C	1	Projection Screen with parametric screen 4857: 12x10	
323	A	2	downloadobjectfile?id=d9e4cc38-c267-400e-86e8-ed68ea75e4e9: 6003	

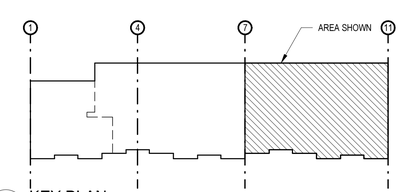

A KEY PLAN

SCALE: NTS

LONG & ASSOCIATES
architects | engineers, inc.
4525 South Manhattan Avenue, Tampa, FL 33611-2305
T813.839.0306 F813.839.4616 AAC001624 IBDR CGC1511025
www.longandassociates.com

THIS DOCUMENT IS COPYRIGHTED IN A PROTECTED FORM. THE PROPERTY OF LONG & ASSOCIATES. ALL RIGHTS OF REPRODUCTION OR COPIES WITHOUT WRITTEN CONSENT OF LONG & ASSOCIATES, INC. ARE RESERVED.

HILLSBOROUGH COUNTY SHERIFF'S OFFICE

PINEBROOK BUILDING 4 INTERIOR RENOVATION

1220 - 1238 TECH BLVD.
TAMPA, FL 33619

Seal

CHRISTOPHER K. RAWLINS, A.I.A.
AR100384

No.	Date	Issues & Revisions
1	11/13/19	ADDENDUM #1

TO THE BEST OF THE ARCHITECT'S AND/OR ENGINEER'S KNOWLEDGE THESE PLANS AND SPECIFICATIONS COMPLY WITH THE APPLICABLE MINIMUM BUILDING CODES AND THE APPLICABLE FIRE-SAFETY STANDARDS

Phase: 100% CONSTRUCTION DRAWINGS
Drawn By: JP
Checked By: CKR
Job No: 19002
Date: SEPTEMBER 20, 2019
11/14/2019 1:39:31 PM

PARTIAL ENLARGED FURNITURE PLAN

A1.2

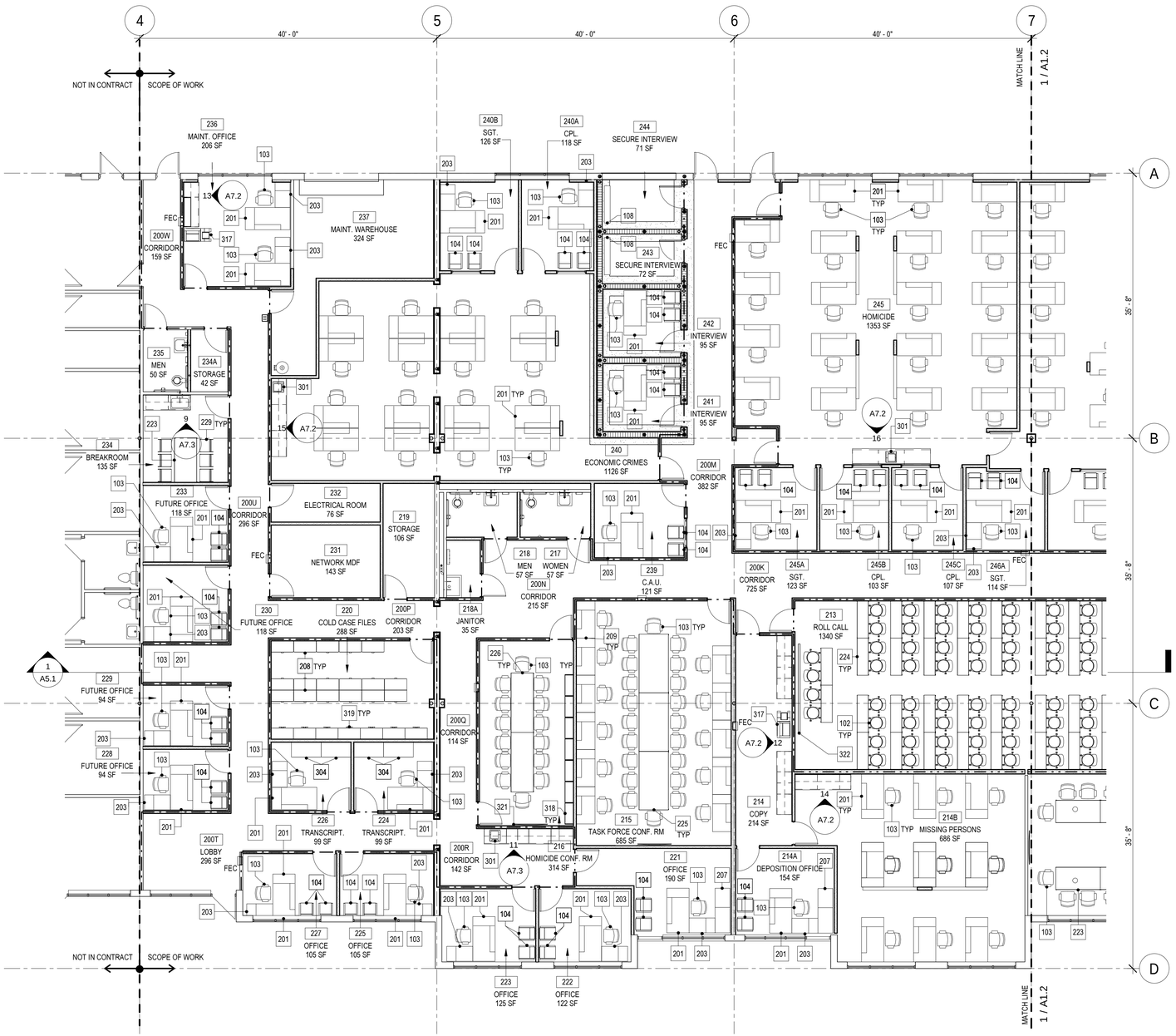

N

1 PARTIAL ENLARGED FURNITURE PLAN

SCALE: 1/8" = 1'-0"

0' 4' 8' 16'

GENERAL EQUIPMENT / FUNITURE SCHEDULE

ITEM STATUS LEGEND
A – PROVIDED BY CONTRACTOR, INSTALLED BY CONTRACTOR
B – PROVIDED BY OWNER, INSTALLED BY CONTRACTOR
C – PROVIDED BY OWNER, INSTALLED BY OWNER

NO.	STATUS	QTY	DESCRIPTION	COMMENTS
101	C	3	Draftsman_Chair__Laboratory_Chair_10948: STANDARD	
102	C	89	Steelcase Turnstone - Jack - Stool - Swivel Only Mechanism: Armless	
103	C	202	Steelcase - Seating - Siento Design Package: High Back Executive Chair	
104	C	80	Steelcase Health - Malibu - Seating - Tandem Chair: 1 Seat - Open Back, Open Arm	
105	C	1	Steelcase Health - Malibu - Seating - Tandem Chair: 3 Seats - Open Back, Open Arm	
106	C	60	Furniture_Chair_IconsOfDenmark_NamNam_ClassicChair: 1	
107	C	6	Steelcase Turnstone - Jack - Stool - Swivel Only Mechanism: Height Adjustable T Arm	
108	A	2	Locker_Room_Bench_3_-_739_2895: 5' Long	
109	C	21	Steelcase - Seating - Protégé 433 Series - Work Chair: Soft Arm Cap	
110	A	4	seats_4182: seats_4182	
201	C	126	Steelcase - Garland - Desk - Single Pedestal: Right - 36" D x 72" W	
202	C	7	Steelcase - Garland - Desk - Single Pedestal: Left - 36" D x 72" W	
203	C	36	Steelcase - Garland - Desk - Return: Right - 24" D x 42" W	
204	C	5	Steelcase - Garland - Desk - Single Pedestal: Left - 36" D x 72" W - Bow	
205	C	5	Steelcase - Garland - Bridge: Straight - 48" W	
206	C	4	Steelcase - Garland - Full Storage Credenza - Pedestal and Lateral File: 66" W	
207	C	9	Steelcase - Garland - Kneespace Credenza - Lateral File: Right - 72" W	
208	C	17	Cabinet-File 5 Drawer: 36" x 18" Lat.	
209	C	13	Steelcase - Garland - Desk - Single Pedestal: Left - 30" D x 60" W	
212	C	1	Steelcase - Garland - Kneespace Credenza - Lateral File: Left - 72" W	
213	C	4	12_38_ht_180x80_cm: Colour - (Birch) 36x84	
214	C	4	Cabinet-File 5 Drawer: 38"x20" Homicide Cabinet	
215	C	1	Cabinet-File 5 Drawer: 44"x20" Homicide Folders	
216	C	1	Cabinet-File 5 Drawer: 43"x21" Laten Section Docs	
217	C	1	Cabinet-File 5 Drawer: 24"x17" Fingerprint Cabinet	
218	C	6	Cabinet-File 5 Drawer: 31" x 17"	
219	C	1	Book_Shelf_767: Book_Shelf_767	
220	C	6	COALESSE_E-TABLE_-_Round_Table_8776: 36"	
221		5	Cabinet-File 5 Drawer: 42" x 15" Lat.	
222	C	1	COALESSE_E-TABLE_-_Round_Table_8776: 48"	
223	C	8	Furniture_Table_IconsOfDenmark_Kant_MeetingTable: W36x72Lx30H	
224	C	44	Furniture_Table_IconsOfDenmark_Kant_MeetingTable: W18x60Lx30H	
225	C	3	Furniture_Table_IconsOfDenmark_Kant_MeetingTable: W2400xD1200xH740mm	
226	C	2	Furniture_Table_IconsOfDenmark_Kant_MeetingTable: W36x96Lx30H	
227	C	8	Steelcase - Garland - Desk - Single Pedestal: Left - 30" D x 66" W	
228	C	1	Furniture_Table_IconsOfDenmark_Kant_MeetingTable: W36x120Lx30H 2	
229		6	Chrome_Stacking_Chair_7280: STANDARD	
301	C	8	Laser_Printer_2-Bins_14511: 1	
302	C	3	Cabinet-File 2 Drawer: 36" x 18" 2dwr Lateral	
303	C	6	Cabinet-File 5 Drawer: 24" x 18"	
304		6	Cabinet-File 5 Drawer: 36x24 Lateral	
305		2	F2550 - Shredder, Paper Heavy Duty: F2550 - Shredder, Paper Heavy Duty	
306	C	2	Copier_311: Copier_311	
309	C	1	Cash_Register-POS_4281: Cash_Register-POS_4281	
310	C	1	HP_Laser_Printer_-_Hewlett_Packard_DeskJet_2200_3707: 1	
311	C	1	Ultrasound_Machine_6885: Ultrasound_Machine_6885	
312	C	3	Dell_Color_Laser_Printer_5110cn_3303: 1	
313	C	2	Kitchen_Refrigerator-Kenmore-Top_Freezer_Refrigerator_with_Ice_Maker-18_ cu_ft: 18 cu.ft. Top Freezer Refrigerator - White	
314	C	1	Vending_Machine_-_Snacks_372: 1	
315	C	1	Vending_Machine_-_Soda_371: Beverage Dispenser	
316	C	1	Ice_Machine_7127: Ice_Machine_7127	
317	C	4	Copier_309: Copier_309	
318	C	7	Book_Shelf_775: Book_Shelf_775	
319	C	13	downloadobjectfile?id=73a9ff1b-8831-4b40-821a-18a4f8c12341: 2 Dr Metal Cabinet 7'H	
321	C	7	Samsung_6_series_smartTV__Television__TV_13081: 60" ES6305U	
322	C	1	Projection Screen with parametric screen 4857: 12x10	
323	A	2	downloadobjectfile?id=d9e4cc38-c267-400e-86e8-ed68ea75e4e9: 6003	

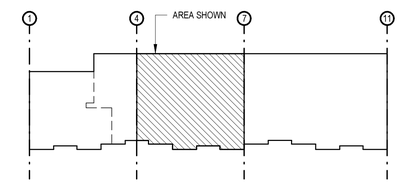

A KEY PLAN

SCALE: NTS

LONG & ASSOCIATES
architects | engineers, inc.
4525 South Manhattan Avenue, Tampa, FL 33611-2305
T813.839.0306 F813.839.4616 AAC001624 IB28 CGC1511025
www.longandassociates.com

THE DOCUMENT IS COPYRIGHTED IN THE DIRECTORS OF LONG & ASSOCIATES. THE DOCUMENT MAY NOT BE REPRODUCED OR REPRODUCED WITHOUT THE EXPRESS WRITTEN CONSENT OF LONG & ASSOCIATES. ALL RIGHTS RESERVED.

HILLSBOROUGH COUNTY SHERIFF'S OFFICE

PINEBROOK BUILDING 4 INTERIOR RENOVATION

1220 - 1238 TECH BLVD.
TAMPA, FL 33619

Seal

CHRISTOPHER K. RAWLINS, A.I.A.
AR100384

No.	Date	Issues & Revisions

TO THE BEST OF THE ARCHITECT'S AND/OR ENGINEER'S KNOWLEDGE THESE PLANS AND SPECIFICATIONS COMPLY WITH THE APPLICABLE MINIMUM BUILDING CODES AND THE APPLICABLE FIRE-SAFETY STANDARDS

Phase: 100% CONSTRUCTION DRAWINGS
Drawn By: JP
Checked By: CKR
Job No: 19002
Date: SEPTEMBER 20, 2019
9/19/2019 5:06:57 PM

PARTIAL ENLARGED FURNITURE PLAN

A1.3

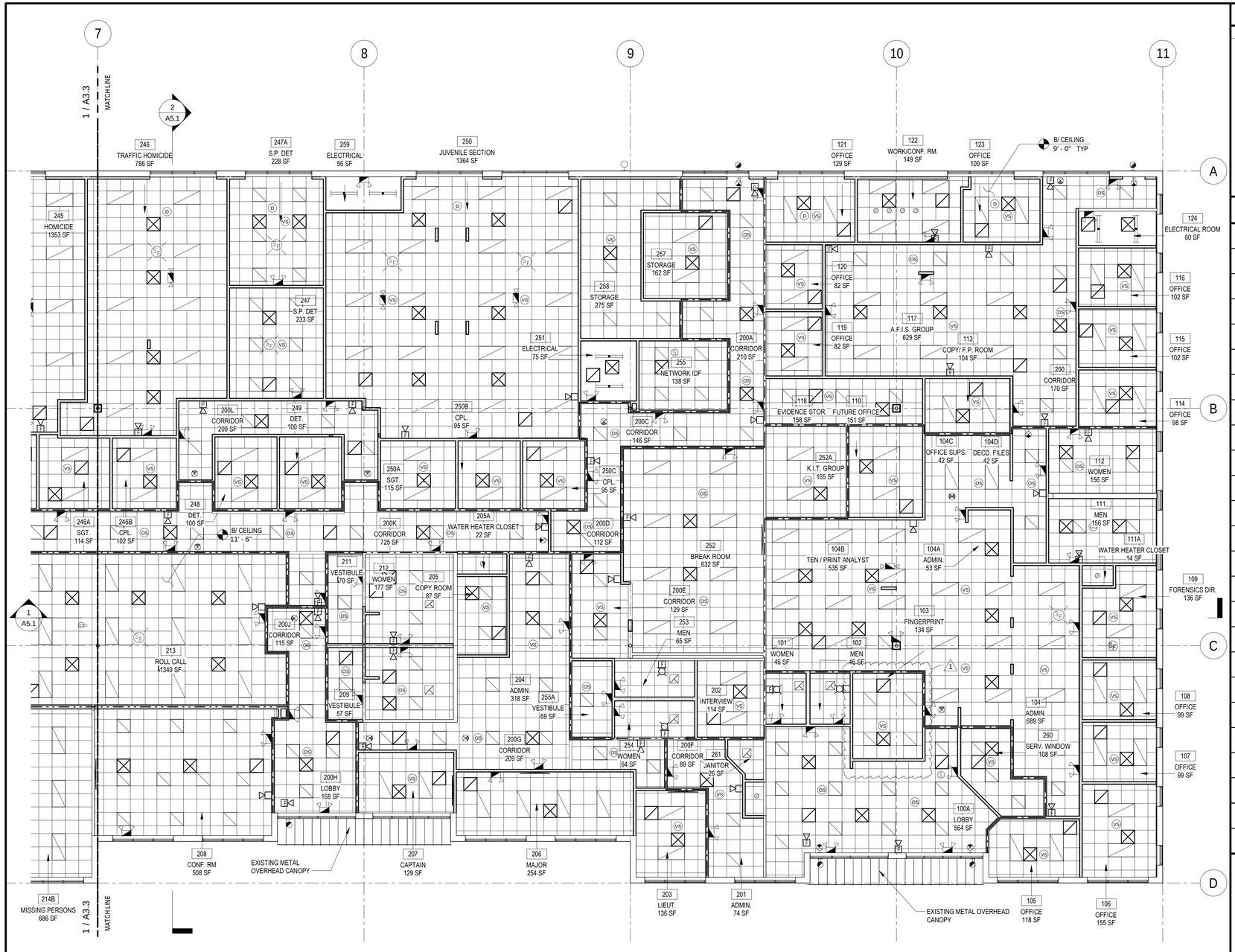

N

1 PARTIAL ENLARGED REFLECTED CEILING

SCALE: 1/8" = 1'-0"

0' 4' 8' 16'

KEYNOTE LEGEND

NO.	DESCRIPTION

REFLECTED CEILING PLAN LEGEND

S	SMOKE DETECTOR
	RETURN EXHAUST GRILLE
	EXHAUST FAN
	SUPPLY AIR DIFFUSER
	SURFACE FLUORESCENT 1'x4' LIGHT FIXTURE
	RECESSED FLUORESCENT 2'x4' LIGHT FIXTURE
	EMERGENCY RECESSED FLUORESCENT 2'x4' LIGHT FIXTURE
	SURFACE FLUORESCENT 2'X 4' LIGHT FIXTURE
	EMERGENCY SURFACE FLUORESCENT 2'X 4' LIGHT FIXTURE
	FLUORESCENT INDUSTRIAL OR STRIP LIGHT FIXTURE
	EMERGENCY FLUORESCENT INDUSTRIAL OR STRIP LIGHT FIXTURE
	PENDANT FIXTURES
	EMERGENCY PENDANT FIXTURES
	SURFACE OR RECESSED DOWN LIGHT FIXTURE
	EMERGENCY SURFACE OR RECESSED DOWN LIGHT FIXTURE
	EXIT SIGN
	WALL MOUNTED LIGHT FIXTURE
	2'x2' SUSPENDED CEILING GRID AND ACOUSTICAL PANEL
	GYP BD CEILING OR SOFFIT DROP
	CANOPY METAL INSULATED ROOF DECK SYSTEM
SP	CEILING MOUNTED FIRE ALARM SPEAKER
	PENDENT SPRINKLER HEAD
	UPRIGHT SPRINKLER HEAD
	ACCESS PANEL
	CEILING MOUNTED PROJECTOR

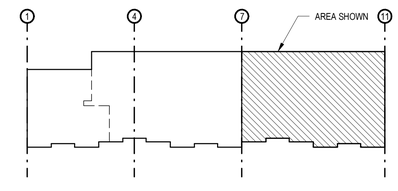

A KEY PLAN

SCALE: NTS

LONG & ASSOCIATES
architects | engineers, inc.
4525 South Manhattan Avenue, Tampa, FL 33611-2305
T:813.839.0506 F:813.839.4616 AA C001624 IB28 CGC1511025
www.longandassociates.com

THIS DOCUMENT IS COPYRIGHTED IN A NOTE TO CLIENT, AND REMAINS THE PROPERTY OF LONG & ASSOCIATES ARCHITECTS/ENGINEERS, INC. ALL RIGHTS RESERVED

HILLSBOROUGH COUNTY SHERIFF'S OFFICE

PINEBROOK BUILDING 4 INTERIOR RENOVATION

1220 - 1238 TECH BLVD.
TAMPA, FL 33619

Seal

CHRISTOPHER K. RAWLINS, A.I.A.
AR100384

No.	Date	Issues & Revisions
1	11/13/19	ADDENDUM #1

TO THE BEST OF THE ARCHITECT'S AND/OR ENGINEER'S KNOWLEDGE THESE PLANS AND SPECIFICATIONS COMPLY WITH THE APPLICABLE MINIMUM BUILDING CODES AND THE APPLICABLE FIRE-SAFETY STANDARDS

Phase: 100% CONSTRUCTION DRAWINGS
Drawn By: JP
Checked By: CKR
Job No: 19002
Date: SEPTEMBER 20, 2019
11/14/2019 1:39:37 PM

PARTIAL ENLARGED REFLECTED CEILING PLAN

A3.2

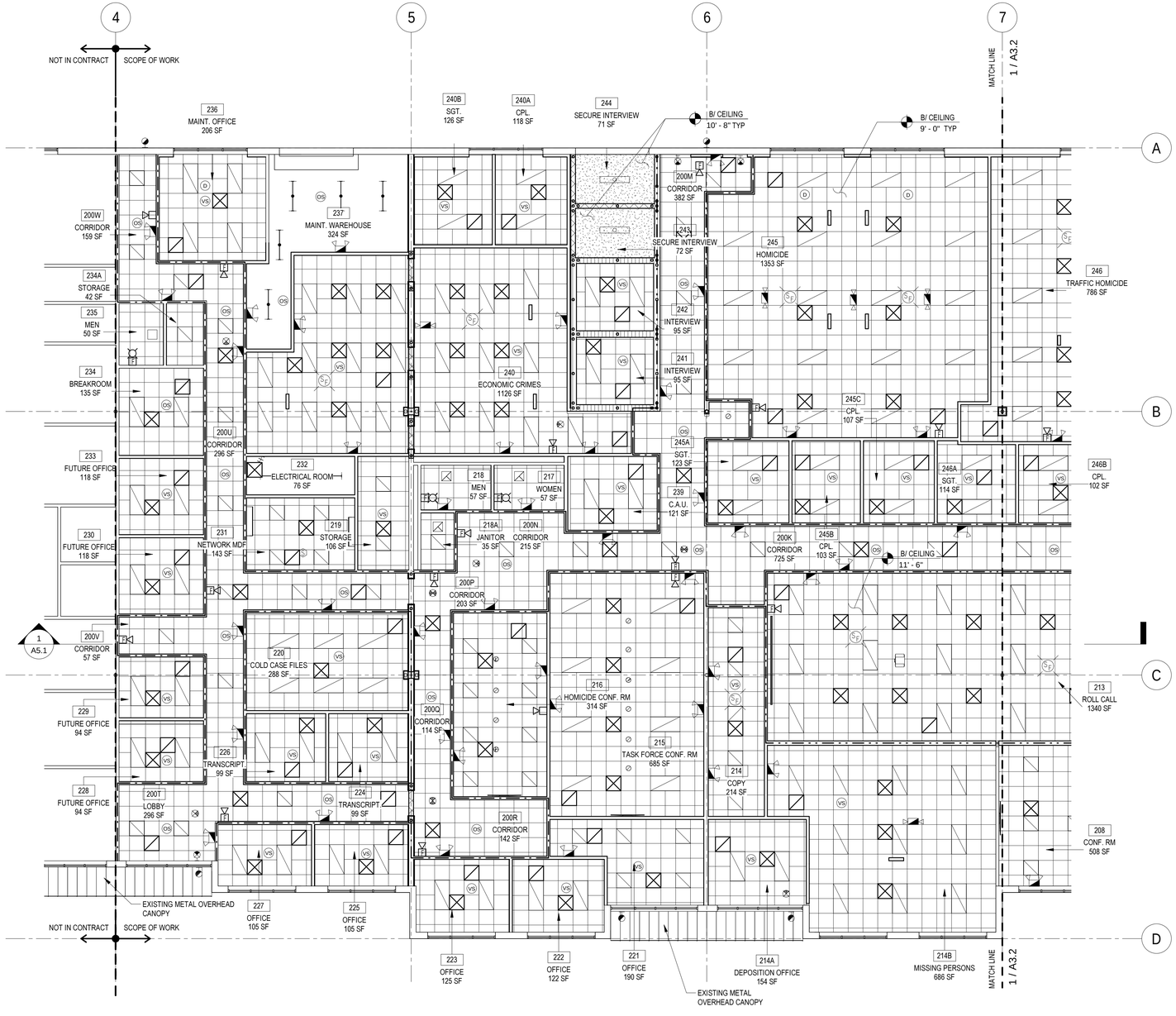

N 1 PARTIAL ENLARGED REFLECTED CEILING

SCALE: 1/8" = 1'-0"

0' 4' 8' 16'

KEYNOTE LEGEND

NO.	DESCRIPTION

REFLECTED CEILING PLAN LEGEND

S	SMOKE DETECTOR
	RETURN EXHAUST GRILLE
	EXHAUST FAN
	SUPPLY AIR DIFFUSER
	SURFACE FLUORESCENT 1'x4' LIGHT FIXTURE
	RECESSED FLUORESCENT 2'x4' LIGHT FIXTURE
	EMERGENCY RECESSED FLUORESCENT 2'x4' LIGHT FIXTURE
	SURFACE FLUORESCENT 2'X 4' LIGHT FIXTURE
	EMERGENCY SURFACE FLUORESCENT 2'X 4' LIGHT FIXTURE
	FLUORESCENT INDUSTRIAL OR STRIP LIGHT FIXTURE
	EMERGENCY FLUORESCENT INDUSTRIAL OR STRIP LIGHT FIXTURE
	PENDANT FIXTURES
	EMERGENCY PENDANT FIXTURES
	SURFACE OR RECESSED DOWN LIGHT FIXTURE
	EMERGENCY SURFACE OR RECESSED DOWN LIGHT FIXTURE
	EXIT SIGN
	WALL MOUNTED LIGHT FIXTURE
	2'x2' SUSPENDED CEILING GRID AND ACOUSTICAL PANEL
	GYP BD CEILING OR SOFFIT DROP
	CANOPY METAL INSULATED ROOF DECK SYSTEM
SP	CEILING MOUNTED FIRE ALARM SPEAKER
	PENDENT SPRINKLER HEAD
	UPRIGHT SPRINKLER HEAD
	ACCESS PANEL
	CEILING MOUNTED PROJECTOR

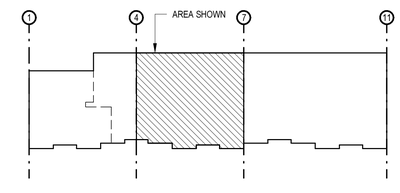

A KEY PLAN

SCALE: NTS

LONG & ASSOCIATES
architects | engineers, inc.
4525 South Manhattan Avenue, Tampa, FL 33611-2305
T:813.839.0506 F:813.839.4616 AA C001624 IB28 CGC1511025
www.longandassociates.com

THIS DOCUMENT IS COPYRIGHTED IN A NOTE TO CLIENT, OWNERS TO ESTIMATION, BID PURPOSES, CONSTRUCTION PURCHASE EXPRESS WRITTEN CONSENT OF LONG & ASSOCIATES FOR ANY OTHER USE. ALL RIGHTS RESERVED

HILLSBOROUGH COUNTY SHERIFF'S OFFICE

PINEBROOK BUILDING 4 INTERIOR RENOVATION

1220 - 1238 TECH BLVD.
TAMPA, FL 33619

Seal

CHRISTOPHER K. RAWLINS, A.I.A.
AR100384

No.	Date	Issues & Revisions

TO THE BEST OF THE ARCHITECT'S AND/OR ENGINEER'S KNOWLEDGE THESE PLANS AND SPECIFICATIONS COMPLY WITH THE APPLICABLE MINIMUM BUILDING CODES AND THE APPLICABLE FIRE-SAFETY STANDARDS

Phase: 100% CONSTRUCTION DRAWINGS
Drawn By: JP
Checked By: CKR
Job No: 19002
Date: SEPTEMBER 20, 2019
9/19/2019 5:07:08 PM

PARTIAL ENLARGED REFLECTED CEILING PLAN

A3.3

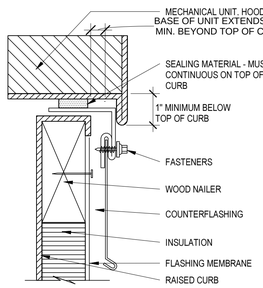

4 RAISED CURB DETAIL
SCALE: NTS

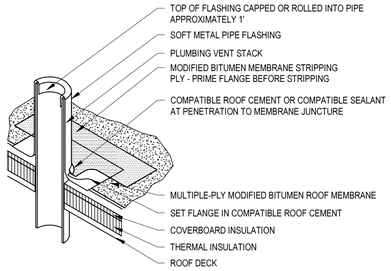

3 NRCA DETAIL MB-12
PLUMBING VENT DETAIL
SCALE: NTS

NOTES:

1. THE CURBS, TOP WOOD NAILER, AND SEAL STRIP ARE TO BE SUPPLIED BY THE CURB MANUFACTURER.
2. WHEN POSSIBLE, THE MECHANICAL UNITS SHOULD NOT BE SET UNTIL THE ROOF MEMBRANE AND FLASHING HAVE BEEN INSTALLED.
3. REFER TO THE SHEET METAL SECTION OF THE METAL ROOFING MANUAL FOR JOINERY AND SECUREMENT OPTIONS FOR SHEET METAL.

NOTE: SECURELY FASTEN ALL CURBS TO DECK AND ALL EQUIPMENT TO CURBS TO MEET WIND LOADS. SEE STRUCT & MECH DRAWINGS

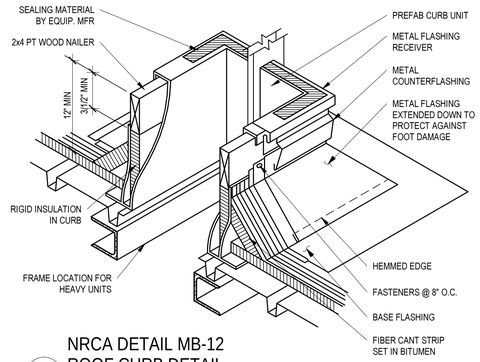

2 NRCA DETAIL MB-12
ROOF CURB DETAIL
SCALE: NTS

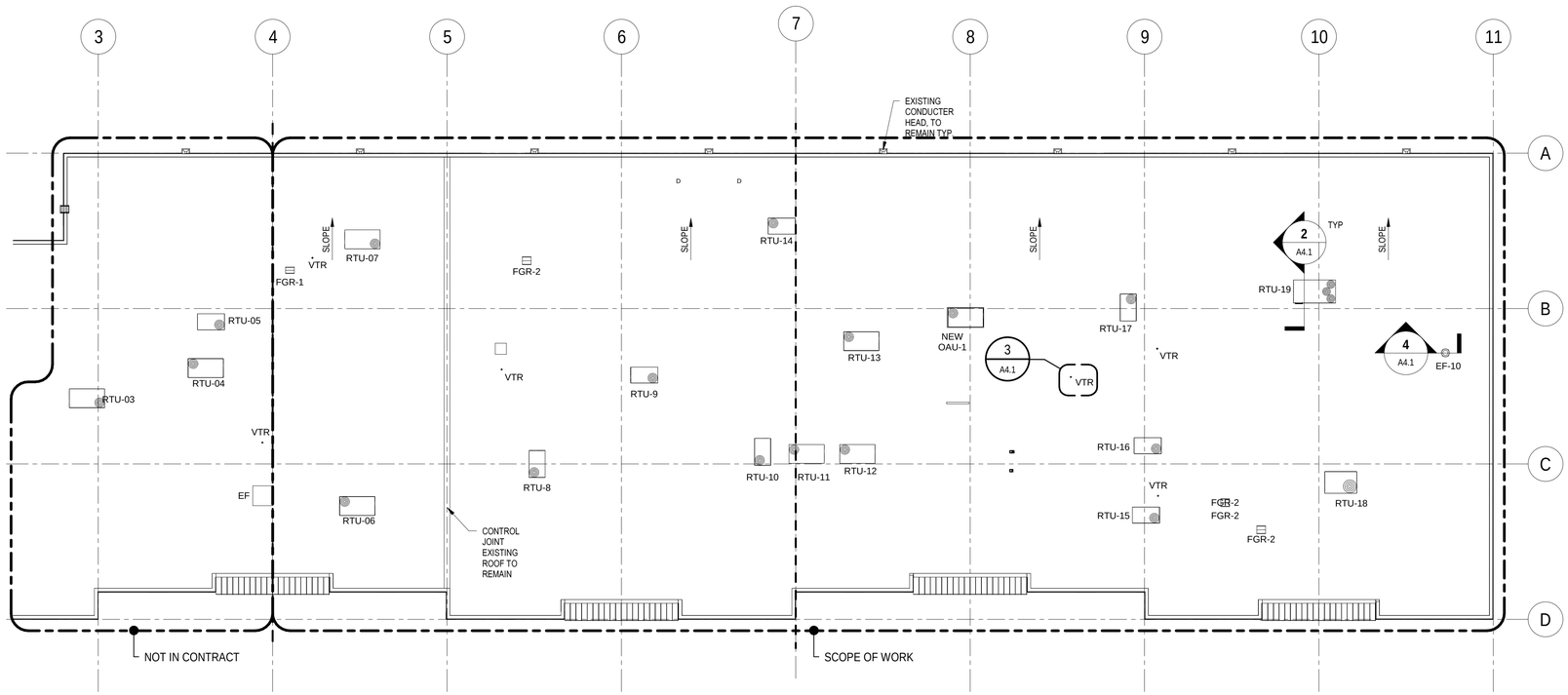

N 1 OVERALL ROOF PLAN
SCALE: 1/16" = 1'-0"

0' 8' 16' 32'

KEYNOTE LEGEND

NO.	DESCRIPTION

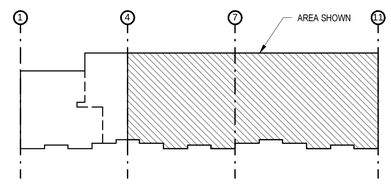

A KEY PLAN
SCALE: NTS

LONG & ASSOCIATES
architects | engineers, inc.
4525 South Manhattan Avenue, Tampa, FL 33611-2305
T:813.839.0506 F:813.839.4616 AA C001624 IBDR CGC1511025
www.longandassociates.com

THIS DOCUMENT IS COPYRIGHTED IN A NOTICE CLAIMING OWNERSHIP BY LONG & ASSOCIATES. REPRODUCTION OR REPRODUCTION WITHOUT WRITTEN CONSENT BY LONG & ASSOCIATES IS PROHIBITED. ALL RIGHTS RESERVED.

HILLSBOROUGH COUNTY SHERIFF'S OFFICE

PINEBROOK BUILDING 4 INTERIOR RENOVATION

1220 - 1238 TECH BLVD.
TAMPA, FL 33619

Seal

CHRISTOPHER K. RAWLINS, A.I.A.
AR100384

No.	Date	Issues & Revisions

TO THE BEST OF THE ARCHITECT'S AND/OR ENGINEER'S KNOWLEDGE THESE PLANS AND SPECIFICATIONS COMPLY WITH THE APPLICABLE MINIMUM BUILDING CODES AND THE APPLICABLE FIRE-SAFETY STANDARDS

Phase: 100% CONSTRUCTION DRAWINGS
Drawn By: CQH
Checked By: CKR
Job No: 19002
Date: SEPTEMBER 20, 2019
9/19/2019 5:07:13 PM

OVERALL ROOF PLAN

A4.1

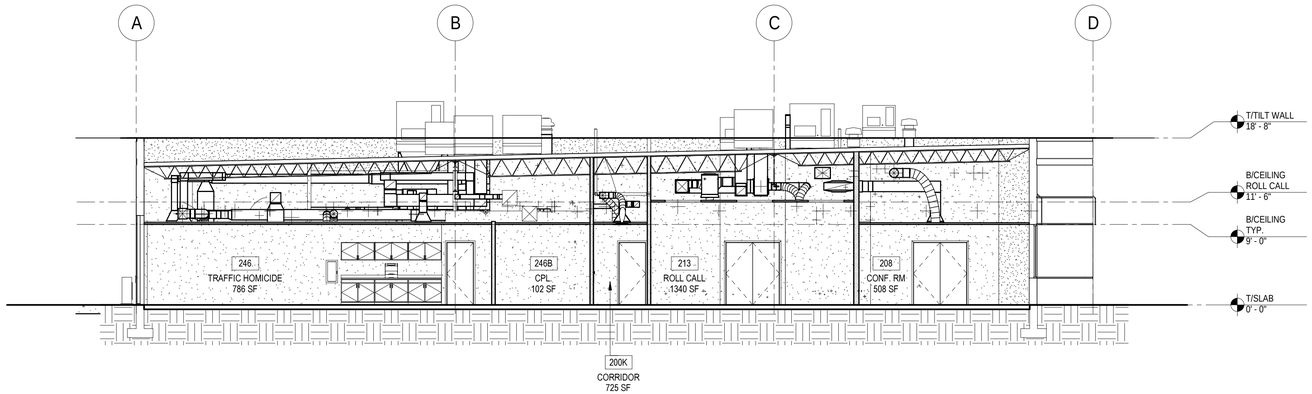

2 BUILDING SECTION

SCALE: 1/8" = 1'-0"

0' 4' 8' 16'

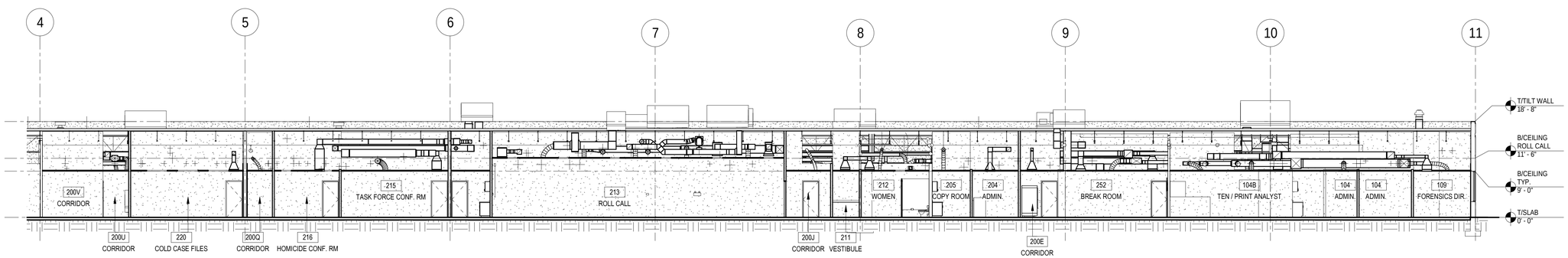

1 BUILDING SECTION

SCALE: 3/32" = 1'-0"

0' 5' 10' 20'

LONG & ASSOCIATES
architects | engineers, inc.
4525 South Manhattan Avenue, Tampa, FL 33611-2305
T:813.839.0506 F:813.839.4616 AAC0001624 IB28 CGC1511025
www.longandassociates.com

THIS DOCUMENT IS COPYRIGHTED MATERIAL AND THEREFORE IS DISTINGUISHED SUBJECT TO THE PROTECTION RECEIVED BY THE COPYRIGHT LAWS OF THE UNITED STATES. THE PROPERTY OF LONG & ASSOCIATES, INC. ALL RIGHTS RESERVED.

HILLSBOROUGH COUNTY SHERIFF'S OFFICE

PINEBROOK BUILDING 4 INTERIOR RENOVATION

1220 - 1238 TECH BLVD.
TAMPA, FL 33619

Seal

CHRISTOPHER K. RAWLINS, A.I.A.
AR100384

No.	Date	Issues & Revisions

TO THE BEST OF THE ARCHITECT'S AND/OR ENGINEER'S KNOWLEDGE THESE PLANS AND SPECIFICATIONS COMPLY WITH THE APPLICABLE MINIMUM BUILDING CODES AND THE APPLICABLE FIRE-SAFETY STANDARDS

Phase: 100% CONSTRUCTION DRAWINGS
Drawn By: JP
Checked By: CKR
Job No: 19002
Date: SEPTEMBER 20, 2019
9/19/2019 5:07:20 PM

BUILDING SECTIONS

A5.1

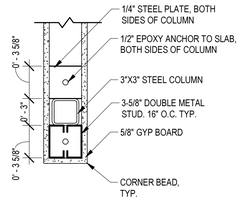

14 LOW WALL END DETAIL TYP.
SCALE: 1 1/2" = 1'-0"

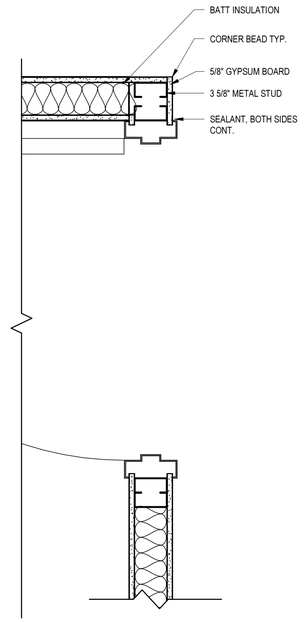

10 TYP 0" RETURN DOOR FRAME
SCALE: 1 1/2" = 1'-0"

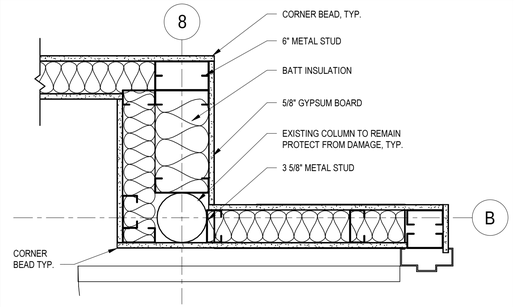

7 COLUMN WRAP DETAIL 3
SCALE: 1 1/2" = 1'-0"

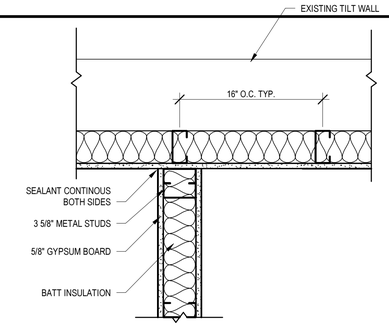

3 STUDWALL TERMINATION
SCALE: 1 1/2" = 1'-0"

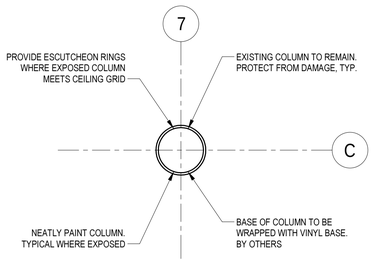

13 EXPOSED COLUMN DETAIL
SCALE: 1 1/2" = 1'-0"

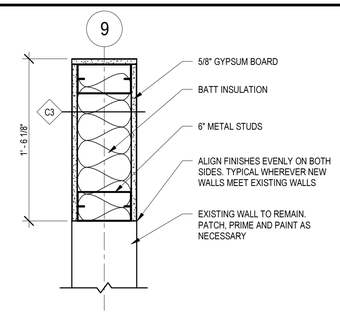

6 NEW WALL TO EXISTING WALL DETAIL
SCALE: 1 1/2" = 1'-0"

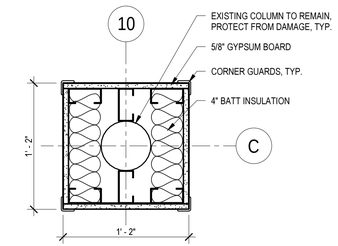

2 COLUMN WRAP DETAIL 1
SCALE: 1 1/2" = 1'-0"

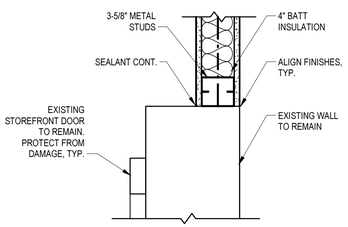

12 STUD WALL TO EXISTING WALL DETAIL
SCALE: 1 1/2" = 1'-0"

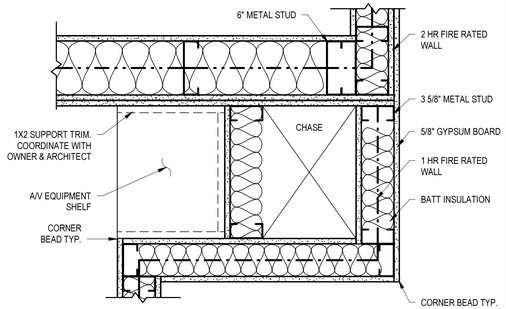

9 A/V EQUIPMENT SHAFT DETAIL
SCALE: 1 1/2" = 1'-0"

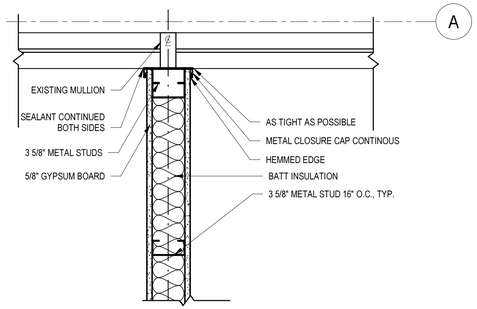

5 STUD WALL TO MULLION
SCALE: 1 1/2" = 1'-0"

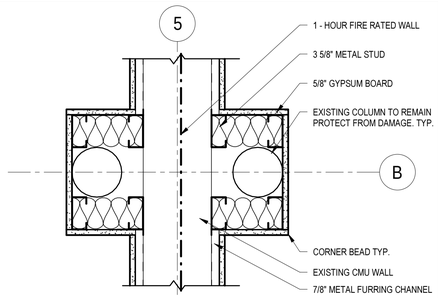

11 COLUMN WRAP DETAIL 5
SCALE: 1 1/2" = 1'-0"

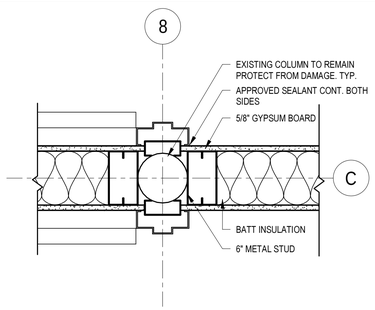

8 COLUMN WRAP DETAIL 4
SCALE: 1 1/2" = 1'-0"

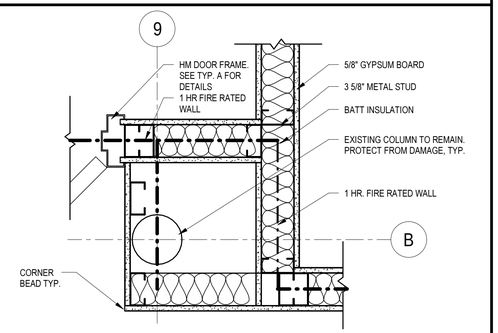

4 COLUMN WRAP DETAIL 2
SCALE: 1 1/2" = 1'-0"

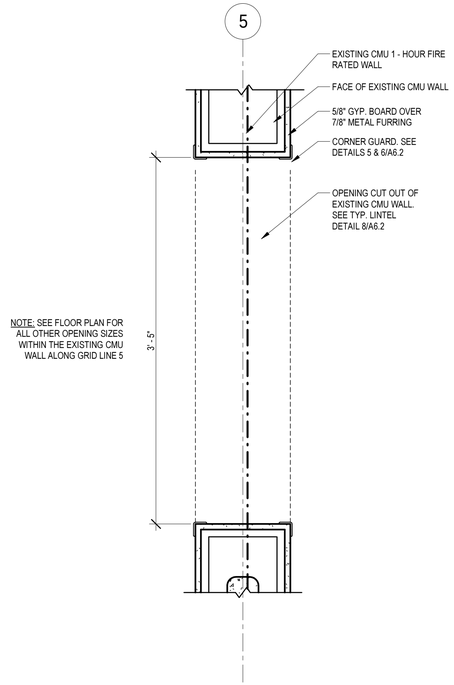

NOTE: SEE FLOOR PLAN FOR ALL OTHER OPENING SIZES WITHIN THE EXISTING CMU WALL ALONG GRID LINE 5

1 ENLARGED FLOOR PLAN
SCALE: 1 1/2" = 1'-0"

LONG & ASSOCIATES
architects | engineers, inc.
4525 South Manhattan Avenue, Tampa, FL 33611-2305
T:813.839.0306 F:813.839.4616 AAC001624 IB28 CGC1511025
www.longandassociates.com

THIS DOCUMENT IS COPYRIGHTED BY LONG & ASSOCIATES. OWNERSHIP IS RETAINED BY THE ARCHITECT. REPRODUCTIONS WITHOUT WRITTEN CONSENT OF LONG & ASSOCIATES ARE PROHIBITED. ALL RIGHTS RESERVED.

HILLSBOROUGH COUNTY SHERIFF'S OFFICE

PINEBROOK BUILDING 4 INTERIOR RENOVATION

1220 - 1238 TECH BLVD.
TAMPA, FL 33619

Seal

CHRISTOPHER K. RAWLINS, A.I.A.
AR100384

No.	Date	Issues & Revisions

TO THE BEST OF THE ARCHITECT'S AND/OR ENGINEER'S KNOWLEDGE THESE PLANS AND SPECIFICATIONS COMPLY WITH THE APPLICABLE MINIMUM BUILDING CODES AND THE APPLICABLE FIRE-SAFETY STANDARDS

Phase: 100% CONSTRUCTION DRAWINGS
Drawn By: JP
Checked By: CKR
Job No: 19002
Date: SEPTEMBER 20, 2019
9/19/2019 5:07:24 PM

DETAILS

A6.1

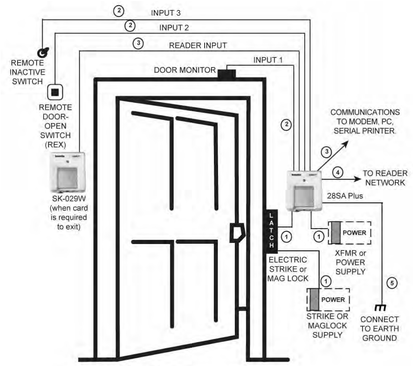

CABLE TYPES:
1. 2 COND, UNSHIELDED 16-18 AWG
2. 2 COND, UNSHIELDED 18-24 AWG
3. 6 COND, SHIELDED, NO TWISTED PAIRS, 18-24 AWG
4. RS-485 - CAT 5 NETWORK CABLE OR TWO TWISTED PAIR
5. 1 CONDUCTOR UNSHIELDED, 16-18 AWG

NOTES:
- Power: 12-24VAC OR DC 125 mA
- Power with slave: 12-16 VAC or 24 VDC 250 mA

7 TYP. CARD ACCESS READER DETAIL
SCALE: 3/32" = 1'-0"

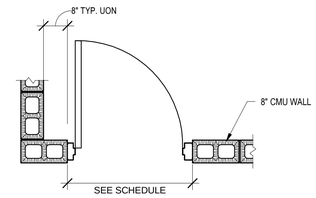

4 TYP CMU PARTITION DOOR LOCATION DIMENSION DETAIL
SCALE: 1/2" = 1'-0"

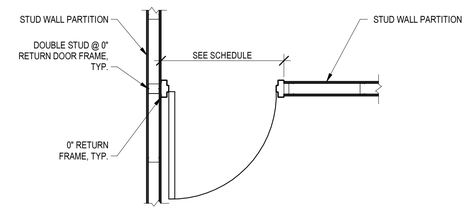

3 TYP GYP PARTITION DOOR DIMENSION DETAIL
SCALE: 1/2" = 1'-0"

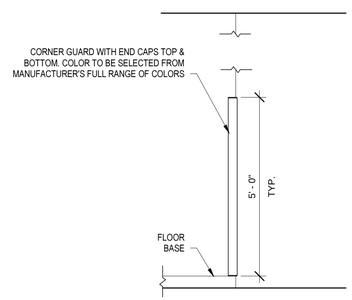

6 TYP. CORNER GUARD ELEVATION
SCALE: 1/2" = 1'-0"

NOTE: INSTALL CORNER GUARD AS SHOWN ON ALL CORNERS WITHIN CORRIDORS. COORDINATE WITH ARCHITECT AND OWNER FOR ADDT'L LOCATIONS

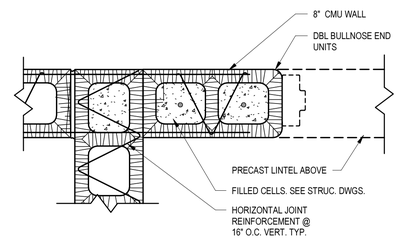

2 TYP BULLNOSE CORNER INTERIOR PLAN DETAIL @ DOOR
SCALE: 1 1/2" = 1'-0"

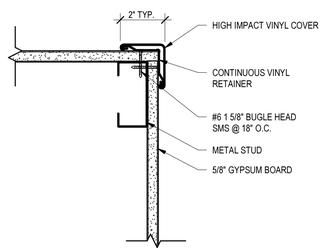

5 TYP. CORNER GUARD DETAIL
SCALE: 3" = 1'-0"

NOTE: INSTALL CORNER GUARD AS SHOWN ON ALL CORNERS WITHIN CORRIDORS. COORDINATE WITH ARCHITECT AND OWNER FOR ADDT'L LOCATIONS

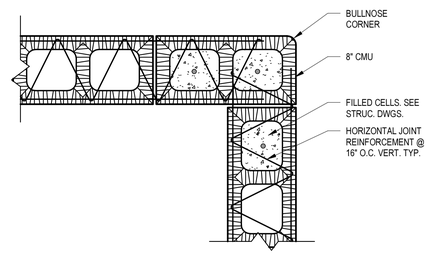

1 TYP BULLNOSE CORNER INTERIOR PLAN DETAIL
SCALE: 1 1/2" = 1'-0"

LONG & ASSOCIATES
architects | engineers, inc.
4525 South Manhattan Avenue, Tampa, FL 33611-2305
T:813.839.0506 F:813.839.4616 AAC0010424 IBPE CGC1511025
www.longandassociates.com

THIS DOCUMENT IS COPYRIGHTED IN A NOTICE FORM. THE PROPERTY OF LONG & ASSOCIATES, INC. THIS PLAN IS NOT TO BE REPRODUCED, CHANGED OR COPIED IN ANY FORM OR MANNER WHATSOEVER, NOR ARE THEY TO BE ASSIGNED TO ANY THIRD PARTY WITHOUT THE EXPRESS WRITTEN CONSENT OF LONG & ASSOCIATES, INC. ALL RIGHTS RESERVED.

HILLSBOROUGH COUNTY SHERIFF'S OFFICE

PINEBROOK BUILDING 4 INTERIOR RENOVATION

1220 - 1238 TECH BLVD.
TAMPA, FL 33619

Seal

CHRISTOPHER K. RAWLINS, A.I.A.
AR100384

No.	Date	Issues & Revisions

TO THE BEST OF THE ARCHITECT'S AND/OR ENGINEER'S KNOWLEDGE THESE PLANS AND SPECIFICATIONS COMPLY WITH THE APPLICABLE MINIMUM BUILDING CODES AND THE APPLICABLE FIRE-SAFETY STANDARDS

Phase: 100% CONSTRUCTION DRAWINGS
Drawn By: JP
Checked By: CKR
Job No: 19002
Date: SEPTEMBER 20, 2019
9/19/2019 5:07:26 PM

DETAILS

A6.2

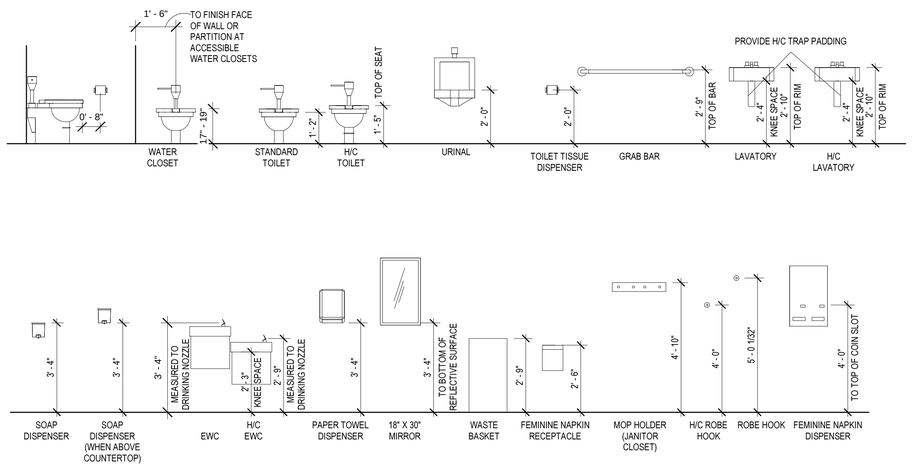

6 TYPICAL MOUNTING HEIGHTS
SCALE: 3/8" = 1'-0"

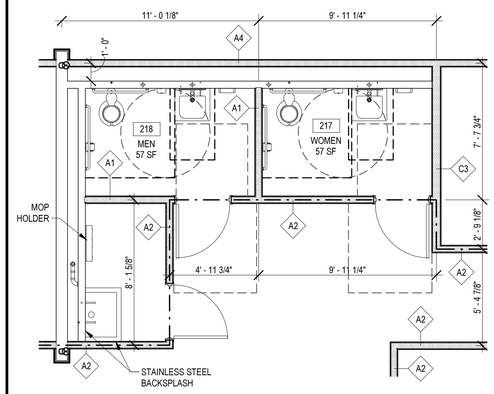

N 4 RESTROOM PLAN 4
SCALE: 1/4" = 1'-0"
0' 2' 4' 8'

SEE 1/A7.1 FOR TYPICAL DIMENSIONS

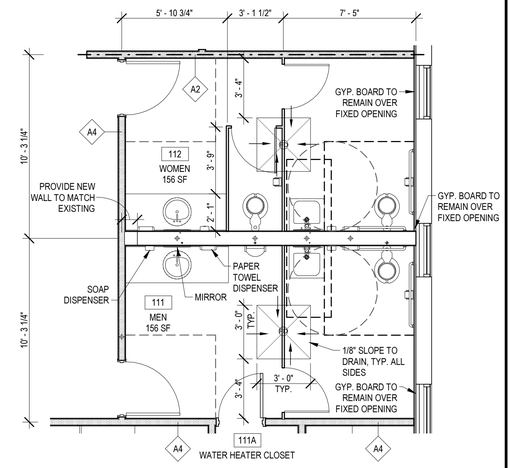

N 2 RESTOOM PLAN 2
SCALE: 1/4" = 1'-0"
0' 2' 4' 8'

SEE 1/A7.1 FOR TYPICAL DIMENSIONS

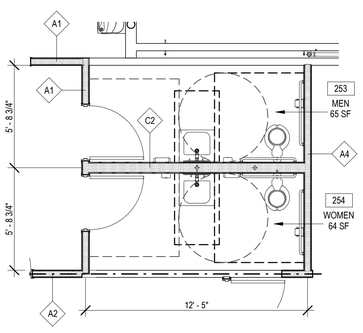

N 7 RESTROOM PLAN 7
SCALE: 1/4" = 1'-0"
0' 2' 4' 8'

SEE 1/A7.1 FOR TYPICAL DIMENSIONS

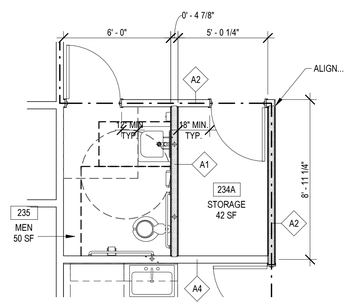

N 5 RESTROOM PLAN 5
SCALE: 1/4" = 1'-0"
0' 2' 4' 8'

SEE 1/A7.1 FOR TYPICAL DIMENSIONS

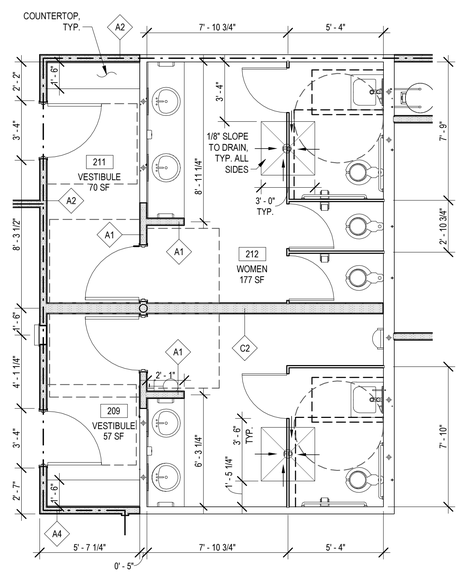

N 3 RESTROOM PLAN 3
SCALE: 1/4" = 1'-0"
0' 2' 4' 8'

SEE 1/A7.1 FOR TYPICAL DIMENSIONS

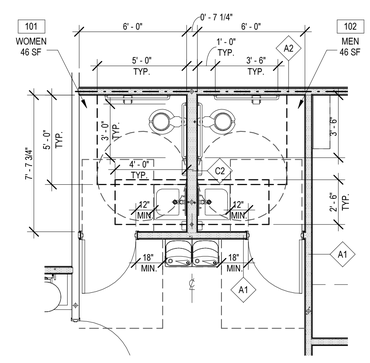

N 1 RESTROOM PLAN 1
SCALE: 1/4" = 1'-0"
0' 2' 4' 8'

SEE 1/A7.1 FOR TYPICAL DIMENSIONS

LONG & ASSOCIATES
architects | engineers, inc.
4525 South Manhattan Avenue, Tampa, FL 33611-2305
T813.839.0506 F813.839.4616 AAC0010424 IBDR CGC1511025
www.longandassociates.com

THIS DOCUMENT IS COPYRIGHTED IN THE STATE OF FLORIDA AND THE REST OF THE NATION
RESERVED FOR EXPRESS WRITTEN CONSENT OF LONG & ASSOCIATES. ALL RIGHTS RESERVED

HILLSBOROUGH COUNTY SHERIFF'S OFFICE

PINEBROOK BUILDING 4 INTERIOR RENOVATION

1220 - 1238 TECH BLVD.
TAMPA, FL 33619

Seal

CHRISTOPHER K. RAWLINS, A.I.A.
AR100384

No.	Date	Issues & Revisions

TO THE BEST OF THE ARCHITECT'S AND/OR ENGINEER'S KNOWLEDGE THESE PLANS AND SPECIFICATIONS COMPLY WITH THE APPLICABLE MINIMUM BUILDING CODES AND THE APPLICABLE FIRE-SAFETY STANDARDS

Phase: 100% CONSTRUCTION DRAWINGS
Drawn By: JP
Checked By: CKR
Job No: 19002
Date: SEPTEMBER 20, 2019
9/19/2019 5:07:31 PM

ENLARGED PLANS

A7.1

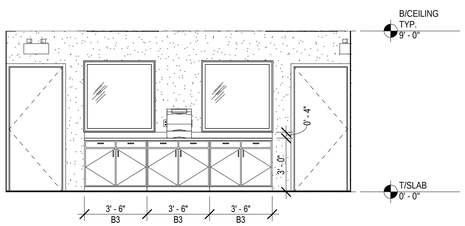

16 HOMICIDE ELEVATION
SCALE: 1/4" = 1'-0"

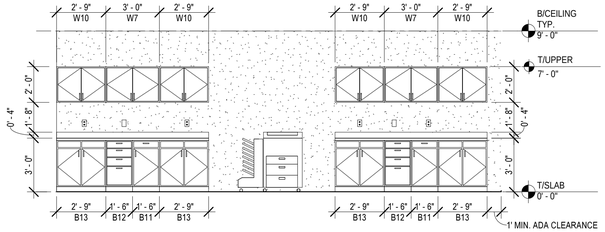

12 COPY ROOM ELEVATION
SCALE: 1/4" = 1'-0"

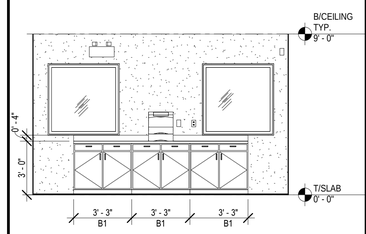

8 JUVENILE SECTION ELEVATION
SCALE: 1/4" = 1'-0"

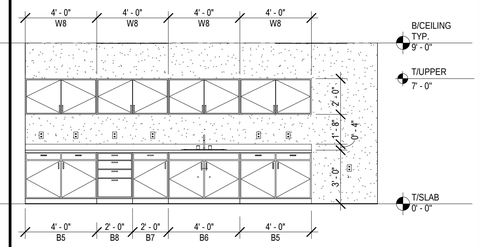

4 BREAK ROOM ELEVATION
SCALE: 1/4" = 1'-0"

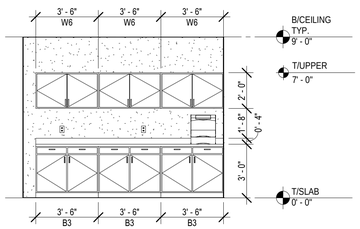

15 ECONOMIC CRIMES ELEVATION
SCALE: 1/4" = 1'-0"

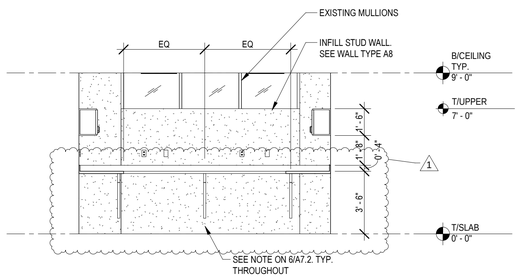

11 SEXUAL PREDATOR DETECTIVE
SCALE: 1/4" = 1'-0"

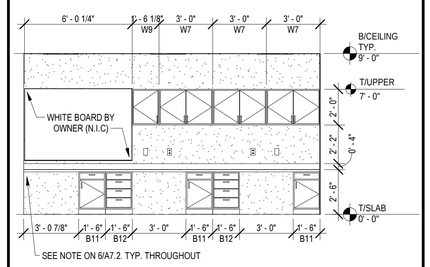

7 SEXUAL PREDATOR DETECTIVE
SCALE: 1/4" = 1'-0"

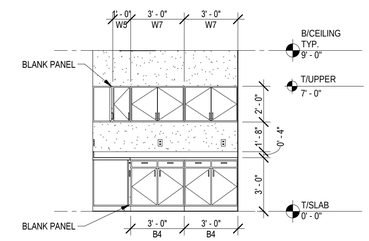

3 COPY / F.P. ROOM ELEVATION
SCALE: 1/4" = 1'-0"

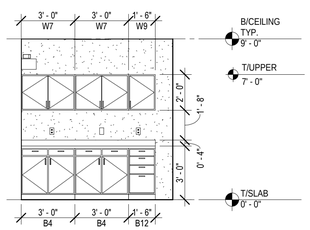

14 MISSING PERSONS ELEVATION
SCALE: 1/4" = 1'-0"

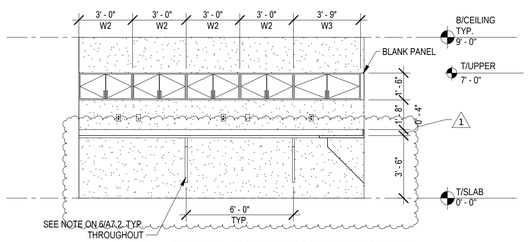

10 SEXUAL PREDATOR DETECTIVE
SCALE: 1/4" = 1'-0"

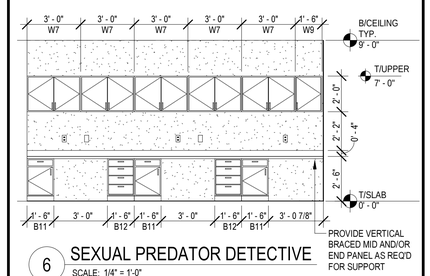

6 SEXUAL PREDATOR DETECTIVE
SCALE: 1/4" = 1'-0"

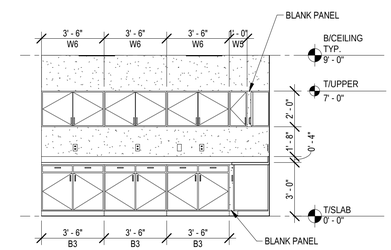

2 COPY / F.P. ROOM ELEVATION
SCALE: 1/4" = 1'-0"

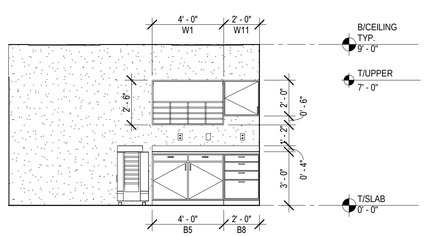

13 MAINTENANCE OFFICE ELEVATION
SCALE: 1/4" = 1'-0"

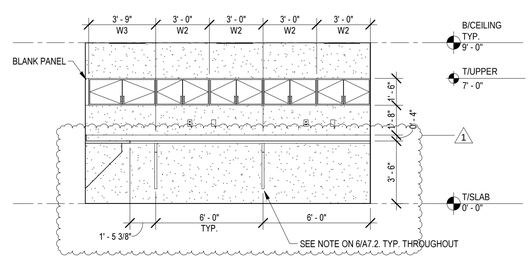

9 SEXUAL PREDATOR DETECTIVE
SCALE: 1/4" = 1'-0"

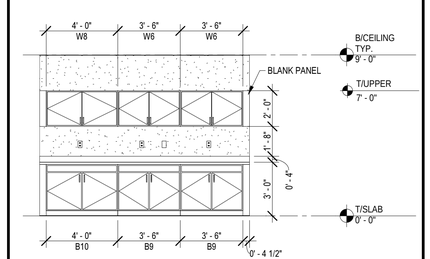

5 COPY ROOM ELEVATION
SCALE: 1/4" = 1'-0"

NOTE: ALL EXPOSED ENDS OF CASEWORK (UPPERS AND BASE) ARE TO RECEIVE FINISHED ENDS

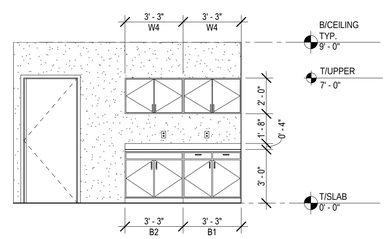

1 OFFICE SUPPLIES ELEVATION
SCALE: 1/4" = 1'-0"

LONG & ASSOCIATES
architects | engineers, inc.
4525 South Manhattan Avenue, Tampa, FL 33611-2305
T:813.839.0506 F:813.839.4616 AAC0010424 IBPE CGC1511025
www.longandassociates.com

THIS DOCUMENT IS COPYRIGHTED BY LONG & ASSOCIATES, ARCHITECTS & ENGINEERS, INC. ALL RIGHTS RESERVED. REPRODUCTION OR DISTRIBUTION WITHOUT WRITTEN PERMISSION OF LONG & ASSOCIATES IS PROHIBITED.

HILLSBOROUGH COUNTY SHERIFF'S OFFICE

PINEBROOK BUILDING 4 INTERIOR RENOVATION

1220 - 1238 TECH BLVD.
TAMPA, FL 33619

Seal

CHRISTOPHER K. RAWLINS, A.I.A.
AR100384

No.	Date	Issues & Revisions
1	11/13/19	ADDENDUM #1

TO THE BEST OF THE ARCHITECT'S AND/OR ENGINEER'S KNOWLEDGE THESE PLANS AND SPECIFICATIONS COMPLY WITH THE APPLICABLE MINIMUM BUILDING CODES AND THE APPLICABLE FIRE-SAFETY STANDARDS

Phase: 100% CONSTRUCTION DRAWINGS
Drawn By: JP
Checked By: CKR
Job No: 19002
Date: SEPTEMBER 20, 2019
11/14/2019 1:39:39 PM

CASEWORK ELEVATIONS

A7.2

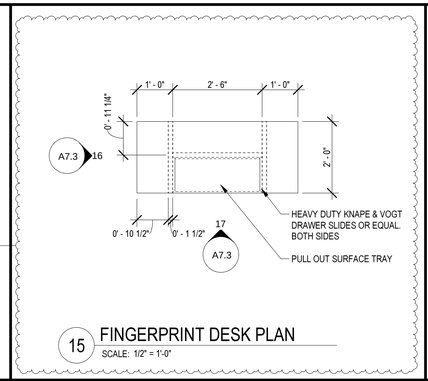

15 FINGERPRINT DESK PLAN
SCALE: 1/2" = 1'-0"

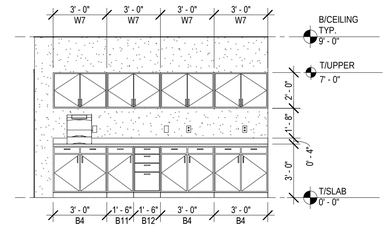

11 CORRIDOR ELEVATION
SCALE: 1/4" = 1'-0"

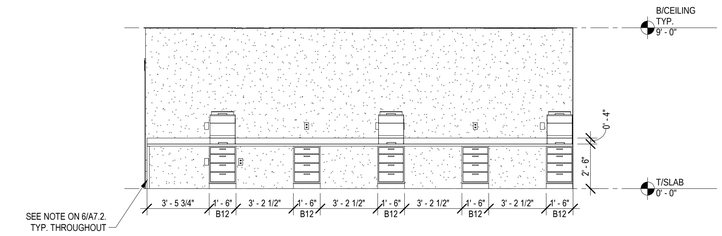

4 TEN / PRINT ANALYST ELEVATION
SCALE: 1/4" = 1'-0"

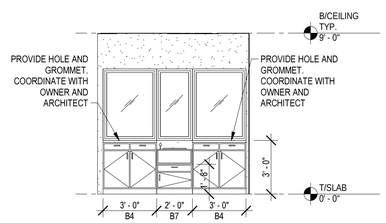

14 SERVICE WINDOW ELEVATION
SCALE: 1/4" = 1'-0"

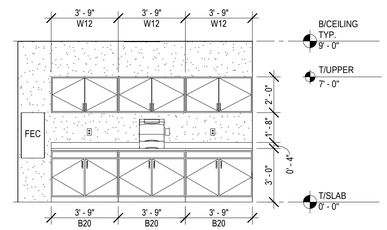

10 TRAFFIC HOMICIDE ELEVATION
SCALE: 1/4" = 1'-0"

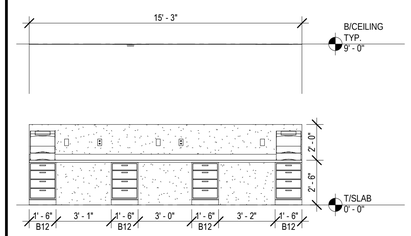

7 A.F.I.S. GROUP ELEVATION
SCALE: 1/4" = 1'-0"

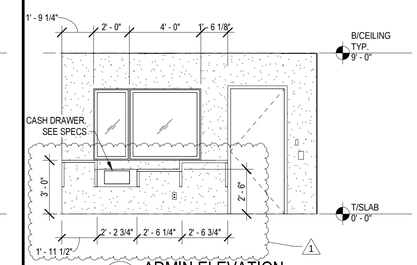

3 ADMIN ELEVATION
SCALE: 1/4" = 1'-0"

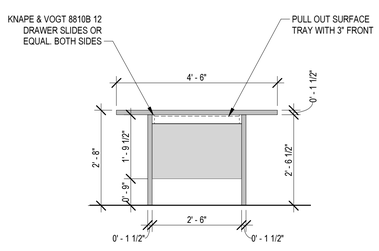

17 FINGERPRINT DESK FRONT ELEVATION
SCALE: 1/2" = 1'-0"

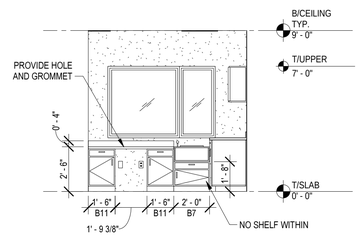

13 ADMINISTRATION SERVICE ELEVATION
SCALE: 1/4" = 1'-0"

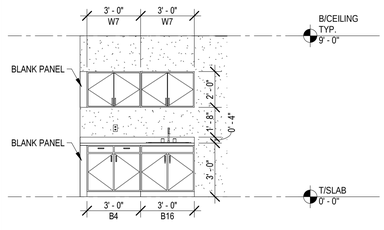

9 BREAKROOM ELEVATION
SCALE: 1/4" = 1'-0"

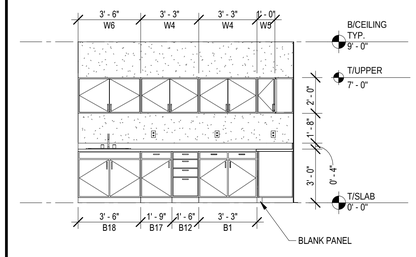

6 K.I.T. GROUP ELEVATION
SCALE: 1/4" = 1'-0"

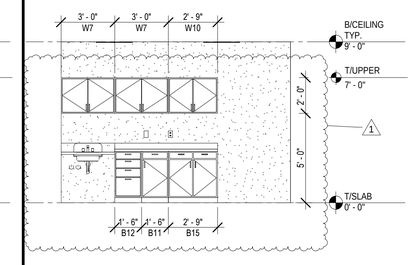

2 FINGERPRINT ELEVATION
SCALE: 1/4" = 1'-0"

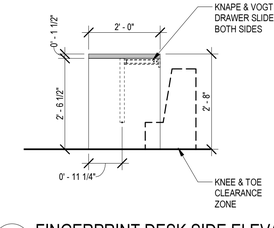

16 FINGERPRINT DESK SIDE ELEVATION
SCALE: 1/2" = 1'-0"

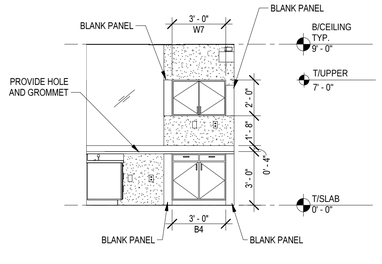

12 ADMINISTRATION ELEVATION
SCALE: 1/4" = 1'-0"

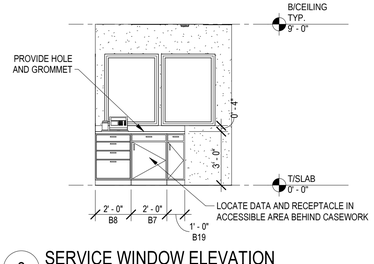

8 SERVICE WINDOW ELEVATION
SCALE: 1/4" = 1'-0"

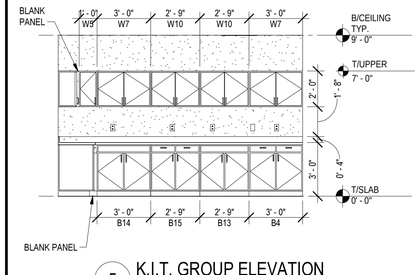

5 K.I.T. GROUP ELEVATION
SCALE: 1/4" = 1'-0"

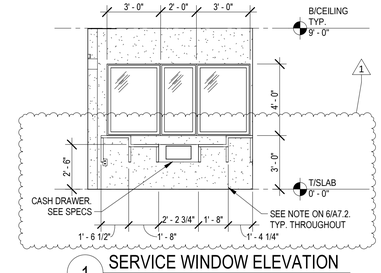

1 SERVICE WINDOW ELEVATION
SCALE: 1/4" = 1'-0"

LONG & ASSOCIATES
architects | engineers, inc.
4525 South Manhattan Avenue, Tampa, FL 33611-2305
T:813.839.0506 F:813.839.4616 AAC0001624 IIBB CGC1511025
www.longandassociates.com

THIS DOCUMENT IS COPYRIGHTED IN A LIMITED FORM. OWNERSHIP IS RETAINED BY THE ARCHITECT. REPRODUCTIONS WITHOUT WRITTEN CONSENT OF LONG & ASSOCIATES ARE PROHIBITED. ALL RIGHTS RESERVED.

HILLSBOROUGH COUNTY SHERIFF'S OFFICE

PINEBROOK BUILDING 4 INTERIOR RENOVATION

1220 - 1238 TECH BLVD.
TAMPA, FL 33619

Seal

CHRISTOPHER K. RAWLINS, A.I.A.
AR100384

No.	Date	Issues & Revisions
1	11/13/19	ADDENDUM #1

TO THE BEST OF THE ARCHITECT'S AND/OR ENGINEER'S KNOWLEDGE THESE PLANS AND SPECIFICATIONS COMPLY WITH THE APPLICABLE MINIMUM BUILDING CODES AND THE APPLICABLE FIRE-SAFETY STANDARDS

Phase: 100% CONSTRUCTION DRAWINGS
Drawn By: JP
Checked By: CKR
Job No: 19002
Date: SEPTEMBER 20, 2019
11/14/2019 1:39:40 PM

CASEWORK ELEVATIONS

A7.3

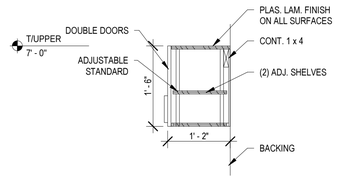

8 W2 & 3 CASEWORK SECTION
SCALE: 3/4" = 1'-0"

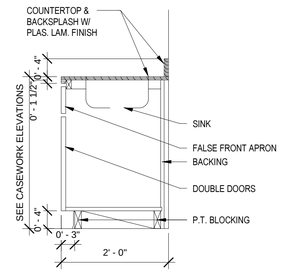

5 B6, 16, 18 CASEWORK SECTION
SCALE: 3/4" = 1'-0"

CASEWORK NOTES:

B = BASE UNIT
W = WALL UNIT
T = TALL UNIT
L = WITH LOCKS

1. ALL EXPOSED TO VIEW SURFACES OF CASEWORK TO HAVE PLASTIC LAMINATE FINISH
2. INTERIOR OF ALL CASEWORK TO HAVE WHITE CABINET LINER OR MELIMINE
3. ALL COUNTERTOP CORNERS TO HAVE EASED EDGES
4. REFER TO ELECTRICAL DRAWINGS FOR ELEC & DATA OUTLETS, PROVIDE FINISH CHASE AS REQUIRED FOR SERVICES AS REQUIRED. PROVIDE 2 1/2" FLUSH COUNTERTOP GROMMETS AT COMPUTER DATA AND RECEPTACLE OUTLET LOCATIONS TO ALLOW FOR WIRING FROM UNDER COUNTER TO COMPUTER ON COUNTERTOP. SEE ELECTRICAL DRAWINGS FOR COMPUTER DATA AND RECEPTACLE OUTLET LOCATIONS
5. ALL BASE CABINETS BLOCKING TO BE PT 2x4'S @ 24" OC
6. VERIFY ALL DIMENSIONS IN THE FIELD PRIOR TO FABRICATION, INCLUDING OPENING SIZES FOR SELECTED EQUIPMENT.
7. ALL BACKSPLASH TO RETURN ON WALLS AT ENDS OF COUNTERTOPS
8. PROVIDE VINYL BASE AT ALL BASE CABINETS
9. CASEWORK CONTRACTOR TO NEATLY CUT ALL HOLES IN CASEWORK AND FRAMING FOR ELECTRICAL BOXES, POWER AND DATA BOXES. VERIFY WITH ELECTRICAL DRAWINGS FOR LOCATION
10. NO DEAD END CORNERS IN CASEWORK
11. VERIFY WITH USER EXACT LOCATION OF GROMMETS FOR EQUIPMENT & SHOW ON SHOP DRAWINGS
12. NO PARTICLE BOARD OR MDF SHALL BE USED.

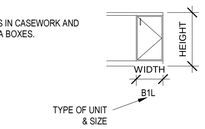

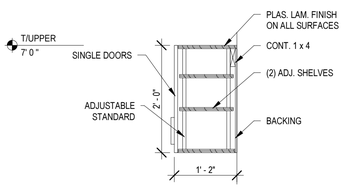

7 W5, 9, 11 CASEWORK SECTION
SCALE: 3/4" = 1'-0"

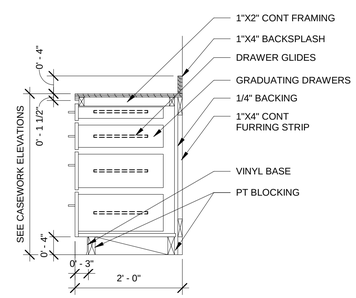

4 B8 & 12 CASEWORK SECTION
SCALE: 3/4" = 1'-0"

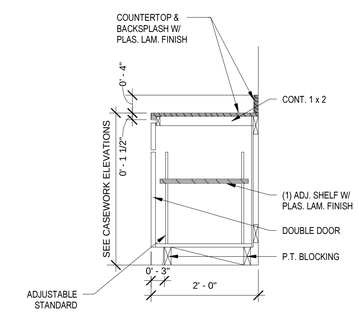

2 B2, 9, 10, 13, 14, 20
CASEWORK SECTION
SCALE: 3/4" = 1'-0"

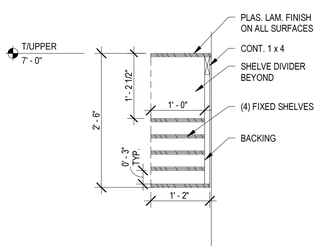

9 W1 CASEWORK SECTION
SCALE: 3/4" = 1'-0"

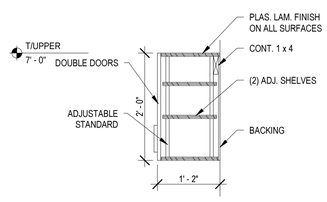

6 W4, 6, 7, 8, 10, 12
CASEWORK SECTION
SCALE: 3/4" = 1'-0"

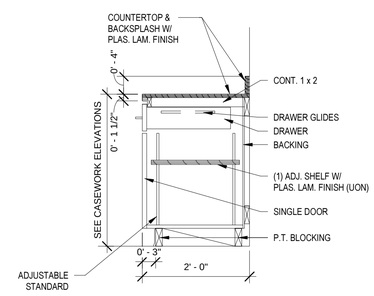

3 B7, 11, 17, 19 CASEWORK SECTION
SCALE: 3/4" = 1'-0"

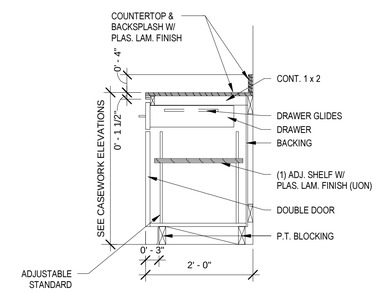

1 B1, 3, 4, 5, 15 CASEWORK SECTION
SCALE: 3/4" = 1'-0"

LONG & ASSOCIATES
architects | engineers, inc.
4525 South Manhattan Avenue, Tampa, FL 33611-2305
T:813.839.0506 F:813.839.4616 AAC001624 IIBB CGC1511025
www.longandassociates.com

THIS DOCUMENT IS COPYRIGHTED IN A LIMITED LEGAL SENSE BY LONG & ASSOCIATES. USE FOR ANY PURPOSE OTHER THAN THE SPECIFIC PROJECT FOR WHICH IT WAS PREPARED IS PROHIBITED WITHOUT THE EXPRESS WRITTEN CONSENT OF LONG & ASSOCIATES. ALL RIGHTS RESERVED.

HILLSBOROUGH COUNTY SHERIFF'S OFFICE

PINEBROOK BUILDING 4 INTERIOR RENOVATION

1220 - 1238 TECH BLVD.
TAMPA, FL 33619

Seal

CHRISTOPHER K. RAWLINS, A.I.A.
AR100384

No.	Date	Issues & Revisions

TO THE BEST OF THE ARCHITECT'S AND/OR ENGINEER'S KNOWLEDGE THESE PLANS AND SPECIFICATIONS COMPLY WITH THE APPLICABLE MINIMUM BUILDING CODES AND THE APPLICABLE FIRE-SAFETY STANDARDS

Phase: 100% CONSTRUCTION DRAWINGS
Drawn By: JP
Checked By: CKR
Job No: 19002
Date: SEPTEMBER 20, 2019
9/19/2019 5:07:43 PM

CASE WORK SECTIONS

A7.4

DOOR SCHEDULE

DOOR									FRAME		DETAILS			
NO.	TYPE	PAIR	WIDTH	HEIGHT	MAT	RATING	FINISH	HW	TYPE	MAT	HEAD	JAMB	SILL	REMARKS
101	A		3' - 0"	7' - 0"	SCWD		P	19	2	HM	6/A8.3	7/A8.3	5/A8.3	UNDERCUT
102	A		3' - 0"	7' - 0"	SCWD		P	19	2	HM	6/A8.3	7/A8.3	5/A8.3	UNDERCUT
103A	A		3' - 0"	7' - 0"	SCWD		P	10	2	HM	6/A8.3	7/A8.3	4/A8.3	
103B	A		3' - 0"	7' - 0"	SCWD	45 MIN	P	07	2	HM	6/A8.3	7/A8.3	4/A8.3	ACCESS CONTROL
104	B		3' - 0"	7' - 0"	SCWD	45 MIN	P	07	2	HM	6/A8.3	7/A8.3	4/A8.3	ACCESS CONTROL
105	A		3' - 0"	7' - 0"	SCWD		P	16	2	HM	6/A8.3	7/A8.3	4/A8.3	
106	A		3' - 0"	7' - 0"	SCWD		P	16	2	HM	6/A8.3	7/A8.3	4/A8.3	
107	A		3' - 0"	7' - 0"	SCWD		P	16	2	HM	6/A8.3	7/A8.3	4/A8.3	
108	A		3' - 0"	7' - 0"	SCWD		P	16	2	HM	6/A8.3	7/A8.3	4/A8.3	
109	A		3' - 0"	7' - 0"	SCWD		P	16	2	HM	6/A8.3	7/A8.3	4/A8.3	
110	A		3' - 0"	7' - 0"	SCWD		P	16	2	HM	6/A8.3	7/A8.3	4/A8.3	
111	A		3' - 0"	7' - 0"	SCWD		P	20	2	HM	6/A8.3	7/A8.3	5/A8.3	UNDERCUT
111A	A		2' - 6"	7' - 0"	SCWD		P	09	2	HM	6/A8.3	7/A8.3	4/A8.3	
112	A		3' - 0"	7' - 0"	SCWD		P	20	2	HM	6/A8.3	7/A8.3	5/A8.3	UNDERCUT
113	A		3' - 0"	7' - 0"	SCWD		P	10	2	HM	6/A8.3	7/A8.3	4/A8.3	
114	A		3' - 0"	7' - 0"	SCWD		P	16	2	HM	6/A8.3	7/A8.3	4/A8.3	
115	A		3' - 0"	7' - 0"	SCWD		P	16	2	HM	6/A8.3	7/A8.3	4/A8.3	
116	A		3' - 0"	7' - 0"	SCWD		P	16	2	HM	6/A8.3	7/A8.3	4/A8.3	
118	A		3' - 0"	7' - 0"	SCWD		P	07	2	HM	6/A8.3	7/A8.3	4/A8.3	ACCESS CONTROL
119	A		3' - 0"	7' - 0"	SCWD		P	16	2	HM	6/A8.3	7/A8.3	4/A8.3	
120	A		3' - 0"	7' - 0"	SCWD		P	16	2	HM	6/A8.3	7/A8.3	4/A8.3	
121	A		3' - 0"	7' - 0"	SCWD		P	16	2	HM	6/A8.3	7/A8.3	4/A8.3	
122	A		3' - 0"	7' - 0"	SCWD		P	10	2	HM	6/A8.3	7/A8.3	4/A8.3	
123	A		3' - 0"	7' - 0"	SCWD		P	16	2	HM	6/A8.3	7/A8.3	4/A8.3	
124	A		3' - 0"	7' - 0"	SCWD		P	07	2	HM	6/A8.3	7/A8.3	4/A8.3	ACCESS CONTROL
200	C		3' - 0"	7' - 0"	SCWD	45 MIN	P	18	2	HM	6/A8.3	7/A8.3	4/A8.3	
200A	C		3' - 0"	7' - 0"	SCWD	45 MIN	P	10	2	HM	6/A8.3	7/A8.3	4/A8.3	
200B	B		3' - 0"	7' - 0"	SCWD	45 MIN	P	10	2	HM	6/A8.3	7/A8.3	4/A8.3	
200C	B		3' - 0"	7' - 0"	SCWD		P	10	2	HM	6/A8.3	7/A8.3	4/A8.3	ACCESS CONTROL
200D	B		3' - 0"	7' - 0"	SCWD	45 MIN	P	10	2	HM	6/A8.3	7/A8.3	4/A8.3	
200E	B		3' - 0"	7' - 0"	SCWD	45 MIN	P	10	2	HM	6/A8.3	7/A8.3	4/A8.3	PINNED OPEN
200F	B		3' - 0"	7' - 0"	SCWD	45 MIN	P	07	2	HM	6/A8.3	7/A8.3	4/A8.3	
200G1	B		3' - 0"	7' - 0"	SCWD	45 MIN	P	10	2	HM	6/A8.3	7/A8.3	4/A8.3	
200G2	B		3' - 0"	7' - 0"	SCWD	45 MIN	P	10	2	HM	6/A8.3	7/A8.3	4/A8.3	
202	A		3' - 0"	7' - 0"	SCWD	45 MIN	P	10	2	HM	6/A8.3	7/A8.3	4/A8.3	
203	A		3' - 0"	7' - 0"	SCWD		P	16	2	HM	6/A8.3	7/A8.3	4/A8.3	
205	A		3' - 0"	7' - 0"	SCWD		P	14	2	HM	6/A8.3	7/A8.3	4/A8.3	
205A	A		2' - 6"	7' - 0"	SCWD	45 MIN	P	09	2	HM	6/A8.3	7/A8.3	4/A8.3	
206	A		3' - 0"	7' - 0"	SCWD		P	16	2	HM	6/A8.3	7/A8.3	4/A8.3	
207	A		3' - 0"	7' - 0"	SCWD		P	16	2	HM	6/A8.3	7/A8.3	4/A8.3	
208	A	PR	6' - 0"	7' - 0"	SCWD	45 MIN	P	05	2	HM	6/A8.3	7/A8.3	4/A8.3	
209	A		3' - 0"	7' - 0"	SCWD	45 MIN	P	20	2	HM	6/A8.3	7/A8.3	4/A8.3	
210	A		3' - 0"	7' - 0"	SCWD		P	20	2	HM	6/A8.3	7/A8.3	5/A8.3	
211	A		3' - 0"	7' - 0"	SCWD	45 MIN	P	20	2	HM	6/A8.3	7/A8.3	4/A8.3	
212	A		3' - 0"	7' - 0"	SCWD		P	20	2	HM	6/A8.3	7/A8.3	5/A8.3	
213	B	PR	6' - 0"	7' - 0"	SCWD	90 MIN	P	05	2	HM	6/A8.3	7/A8.3	4/A8.3	SEE MANUFACTURER SPECS ON FIRE-RATED GLAZING 13/A8.3
213A	B		3' - 0"	7' - 0"	SCWD	90 MIN	P	08	2	HM	6/A8.3	7/A8.3	4/A8.3	SEE MANUFACTURER SPECS ON FIRE-RATED GLAZING 13/A8.3
214	B		3' - 0"	7' - 0"	SCWD	45 MIN	P	10	2	HM	6/A8.3	7/A8.3	4/A8.3	
214A	A		3' - 0"	7' - 0"	SCWD		P	16	2	HM	6/A8.3	7/A8.3	4/A8.3	
214B	B		3' - 0"	7' - 0"	SCWD		P	10	2	HM	6/A8.3	7/A8.3	4/A8.3	
215	B		3' - 0"	7' - 0"	SCWD	45 MIN	P	10	2	HM	6/A8.3	7/A8.3	4/A8.3	
216	B		3' - 0"	7' - 0"	SCWD	45 MIN	P	10	2	HM	6/A8.3	7/A8.3	4/A8.3	
216A	A		3' - 0"	7' - 0"	SCWD	45 MIN	P	10	2	HM	6/A8.3	7/A8.3	4/A8.3	
217	A		3' - 0"	7' - 0"	SCWD	45 MIN	P	19	2	HM	6/A8.3	7/A8.3	5/A8.3	UNDERCUT
218	A		3' - 0"	7' - 0"	SCWD	45 MIN	P	19	2	HM	6/A8.3	7/A8.3	5/A8.3	UNDERCUT
218A	A		3' - 0"	7' - 0"	SCWD	45 MIN	P	11	2	HM	6/A8.3	7/A8.3	4/A8.3	UNDERCUT
219	A		3' - 0"	7' - 0"	SCWD	45 MIN	P	09	2	HM	6/A8.3	7/A8.3	4/A8.3	UNDERCUT
220	B		3' - 0"	7' - 0"	SCWD	45 MIN	P	09	2	HM	6/A8.3	7/A8.3	4/A8.3	
221	A		3' - 0"	7' - 0"	SCWD	45 MIN	P	17	2	HM	6/A8.3	7/A8.3	4/A8.3	
222	A		3' - 0"	7' - 0"	SCWD	45 MIN	P	16	2	HM	6/A8.3	7/A8.3	4/A8.3	
223	A		3' - 0"	7' - 0"	SCWD	45 MIN	P	16	2	HM	6/A8.3	7/A8.3	4/A8.3	
224	A		3' - 0"	7' - 0"	SCWD	45 MIN	P	16	2	HM	6/A8.3	7/A8.3	4/A8.3	
225	A		3' - 0"	7' - 0"	SCWD	45 MIN	P	16	2	HM	6/A8.3	7/A8.3	4/A8.3	
226	A		3' - 0"	7' - 0"	SCWD	45 MIN	P	16	2	HM	6/A8.3	7/A8.3	4/A8.3	
227	A		3' - 0"	7' - 0"	SCWD	45 MIN	P	16	2	HM	6/A8.3	7/A8.3	4/A8.3	

DOOR SCHEDULE

DOOR									FRAME		DETAILS			
NO.	TYPE	PAIR	WIDTH	HEIGHT	MAT	RATING	FINISH	HW	TYPE	MAT	HEAD	JAMB	SILL	REMARKS
228	A		3' - 0"	7' - 0"	SCWD	45 MIN	P	16	2	HM	6/A8.3	7/A8.3	4/A8.3	
229	A		3' - 0"	7' - 0"	SCWD	45 MIN	P	16	2	HM	6/A8.3	7/A8.3	4/A8.3	
230	A		3' - 0"	7' - 0"	SCWD	45 MIN	P	09	2	HM	6/A8.3	7/A8.3	4/A8.3	
231	A		3' - 0"	7' - 0"	SCWD	45 MIN	P	07	2	HM	6/A8.3	7/A8.3	4/A8.3	ACCESS CONTROL
232	D		3' - 0"	7' - 0"	SCWD	45 MIN	P	07	2	HM	6/A8.3	7/A8.3	4/A8.3	ACCESS CONTROL. SEE MANUFACTURER SPECS ON FIRE-RATED LOUVER 14/A8.3
233	A		3' - 0"	7' - 0"	SCWD	45 MIN	P	16	2	HM	6/A8.3	7/A8.3	4/A8.3	
234	A		3' - 0"	7' - 0"	SCWD	45 MIN	P	10	2	HM	6/A8.3	7/A8.3	4/A8.3	
234A	A		3' - 0"	7' - 0"	SCWD	45 MIN	P	09	2	HM	6/A8.3	7/A8.3	4/A8.3	UNDERCUT
235	A		3' - 0"	7' - 0"	SCWD	45 MIN	P	19	2	HM	6/A8.3	7/A8.3	5/A8.3	UNDERCUT
236	B		3' - 0"	7' - 0"	SCWD	45 MIN	P	16	2	HM	6/A8.3	7/A8.3	4/A8.3	
237	A		3' - 0"	7' - 0"	SCWD	45 MIN	P	07	2	HM	6/A8.3	7/A8.3	4/A8.3	ACCESS CONTROL
239	A		3' - 0"	7' - 0"	SCWD	45 MIN	P	16	2	HM	6/A8.3	7/A8.3	4/A8.3	
240	B		3' - 0"	7' - 0"	SCWD	45 MIN	P	10	2	HM	6/A8.3	7/A8.3	4/A8.3	
240A	A		3' - 0"	7' - 0"	SCWD		P	17	2	HM	6/A8.3	7/A8.3	4/A8.3	
240B	A		3' - 0"	7' - 0"	SCWD		P	17	2	HM	6/A8.3	7/A8.3	4/A8.3	
241	A		3' - 0"	7' - 0"	SCWD	45 MIN	P	12	2	HM	8/A8.3	9/A8.3	4/A8.3	
242	A		3' - 0"	7' - 0"	SCWD	45 MIN	P	12	2	HM	8/A8.3	9/A8.3	4/A8.3	
243	E		3' - 0"	7' - 0"	HM	45 MIN	P	13	1	HM	8/A8.3	9/A8.3	4/A8.3	MAXIMUM DUTY 14 GA.
244	E		3' - 0"	7' - 0"	HM	45 MIN	P	13	1	HM	8/A8.3	9/A8.3	4/A8.3	MAXIMUM DUTY 14 GA.
245	B		3' - 0"	7' - 0"	SCWD	45 MIN	P	10	2	HM	6/A8.3	7/A8.3	4/A8.3	
245A	A		3' - 0"	7' - 0"	SCWD		P	17	2	HM	6/A8.3	7/A8.3	4/A8.3	
245B	A		3' - 0"	7' - 0"	SCWD		P	17	2	HM	6/A8.3	7/A8.3	4/A8.3	
245C	A		3' - 0"	7' - 0"	SCWD		P	17	2	HM	6/A8.3	7/A8.3	4/A8.3	
245D	B		3' - 0"	7' - 0"	SCWD	45 MIN	P	10	2	HM	6/A8.3	7/A8.3	4/A8.3	
245E	B		3' - 0"	7' - 0"	SCWD		P	10	2	HM	6/A8.3	7/A8.3	4/A8.3	
246A	A		3' - 0"	7' - 0"	SCWD		P	17	2	HM	6/A8.3	7/A8.3	4/A8.3	
246B	A		3' - 0"	7' - 0"	SCWD		P	17	2	HM	6/A8.3	7/A8.3	4/A8.3	
246C	B		3' - 0"	7' - 0"	SCWD		P	10	2	HM	6/A8.3	7/A8.3	4/A8.3	
247	A		3' - 0"	7' - 0"	SCWD		P	07	2	HM	6/A8.3	7/A8.3	4/A8.3	ACCESS CONTROL
247A	A		3' - 0"	7' - 0"	SCWD		P	07	2	HM	6/A8.3	7/A8.3	4/A8.3	ACCESS CONTROL
248	A		3' - 0"	7' - 0"	SCWD		P	16	2	HM	6/A8.3	7/A8.3	4/A8.3	
249	A		3' - 0"	7' - 0"	SCWD		P	07	2	HM	6/A8.3	7/A8.3	4/A8.3	
250	B		3' - 0"	7' - 0"	SCWD		P	10	2	HM	6/A8.3	7/A8.3	4/A8.3	
250A	A		3' - 0"	7' - 0"	SCWD		P	16	2	HM	6/A8.3	7/A8.3	4/A8.3	
250B	A		3' - 0"	7' - 0"	SCWD		P	17	2	HM	6/A8.3	7/A8.3	4/A8.3	
250C	A		3' - 0"	7' - 0"	SCWD		P	17	2	HM	6/A8.3	7/A8.3	4/A8.3	
250E	B		3' - 0"	7' - 0"	SCWD	45 MIN	P	10	2	HM	6/A8.3	7/A8.3	4/A8.3	
251	A		3' - 0"	7' - 0"	SCWD	45 MIN	P	07	2	HM	6/A8.3	7/A8.3	4/A8.3	ACCESS CONTROL
252	B		3' - 0"	7' - 0"	SCWD	45 MIN	P	10	2	HM	6/A8.3	7/A8.3	4/A8.3	
252A	A		3' - 0"	7' - 0"	SCWD	45 MIN	P	07	2	HM	6/A8.3	7/A8.3	4/A8.3	ACCESS CONTROL
253	A		3' - 0"	7' - 0"	SCWD		P	19	2	HM	6/A8.3	7/A8.3	5/A8.3	UNDERCUT
254	A		3' - 0"	7' - 0"	SCWD		P	19	2	HM	6/A8.3	7/A8.3	5/A8.3	UNDERCUT
255	A		3' - 0"	7' - 0"	SCWD	45 MIN	P	07	2	HM	6/A8.3	7/A8.3	4/A8.3	ACCESS CONTROL
255A	B		3' - 0"	7' - 0"	SCWD		P	18	2	HM	6/A8.3	7/A8.3	4/A8.3	
255B	B		3' - 0"	7' - 0"	SCWD	45 MIN	P	18	2	HM	6/A8.3	7/A8.3	4/A8.3	
257	A		3' - 0"	7' - 0"	SCWD	45 MIN	P	07	2	HM	6/A8.3	7/A8.3	4/A8.3	ACCESS CONTROL
258	A		3' - 0"	7' - 0"	SCWD	45 MIN	P	09	2	HM	6/A8.3	7/A8.3	4/A8.3	
258A	A		3' - 0"	7' - 0"	SCWD	45 MIN	P	09	2	HM	6/A8.3	7/A8.3	4/A8.3	
260	C		3' - 0"	7' - 0"	SCWD	45 MIN	P	20	2	HM	6/A8.3	7/A8.3	4/A8.3	
260A	C		3' - 0"	7' - 0"	SCWD	45 MIN	P	15	2	HM	6/A8.3	7/A8.3	4/A8.3	
261	A		3' - 0"	7' - 0"	SCWD		P	09	2	HM	6/A8.3	7/A8.3	4/A8.3	UNDERCUT
901	A		3' - 0"	7' - 0"	HM		P	04	2	HM	12/A8.3	11/A8.3	10/A8.3	ACCESS CONTROL
902	EXST		3' - 0"	7' - 0"	EXST		EXST	EXST	EXST	EXST	EXST	EXST	EXST	ACCESS CONTROL - EXISTING TO REMAIN
903	D		3' - 0"	7' - 0"	HM		P	03	2	HM	12/A8.3	11/A8.3	10/A8.3	
904	D		3' - 0"	7' - 0"	HM		P	03	2	HM	12/A8.3	11/A8.3	10/A8.3	ACCESS CONTROL
905	A		3' - 0"	7' - 0"	HM		P	03B	2	HM	12/A8.3	11/A8.3	10/A8.3	
906	A		3' - 0"	7' - 0"	HM		P	03A	2	HM	12/A8.3	11/A8.3	10/A8.3	ACCESS CONTROL
907	A		3' - 0"	7' - 0"	HM		P	03A	2	HM	12/A8.3	11/A8.3	10/A8.3	ACCESS CONTROL
908	EXST		3' - 0"	7' - 0"	EXST		EXST	EXST	EXST	EXST	EXST	EXST	EXST	ACCESS CONTROL - EXISTING TO REMAIN
909	EXST		3' - 0"	7' - 0"	EXST		EXST	EXST	EXST	EXST	EXST	EXST	EXST	LOCKED & CLOSED - EXISTING TO REMAIN
910	EXST		3' - 0"	7' - 0"	EXST		EXST	EXST	EXST	EXST	EXST	EXST	EXST	LOCKED & CLOSED - EXISTING TO REMAIN
911	EXST		3' - 0"	7' - 0"	EXST		EXST	EXST	EXST	EXST	EXST	EXST	EXST	ACCESS CONTROL - EXISTING TO REMAIN
912	EXST		3' - 0"	7' - 0"	EXST		EXST	EXST	EXST	EXST	EXST	EXST	EXST	LOCKED & CLOSED - EXISTING TO REMAIN
913	EXST		3' - 0"	7' - 0"	EXST		EXST	EXST	EXST	EXST	EXST	EXST	EXST	TIMED ACCESS CONTROL - EXISTING TO REMAIN
914	EXST		3' - 0"	7' - 0"	EXST		EXST	EXST	EXST	EXST	EXST	EXST	EXST	TIMED ACCESS CONTROL - EXISTING TO REMAIN

FINISH SCHEDULE LEGEND

EXST	EXISTING TO REMAIN
HM	HOLLOW METAL
P	PAINT
SCWD	SOLID CORE WOOD DOOR

SIGNAGE NOTES:

1. PROVIDE 1 ROOM NAME / NUMBER SIGN ADJACENT TO THE ENTRY DOOR TO EACH ROOM LISTED.
2. SEE SIGNAGE DETAILS AND SPECIFICATION.
3. PROVIDE SHOP DRAWING SHOWING SIGNAGE TEXT, LAYOUT, AND INSTALLATION LOCATIONS FOR OWNER / ARCHITECT APPROVAL PRIOR TO FABRICATION.
4. PROVIDE (1) 4" DOOR NUMBER SIGN CENTERED ON EACH DOOR FRAME HEAD PER SIGN TYPE "C".
5. PROVIDE (1) TACTILE EXIT SIGN (TYPE D) ADJACENT TO EACH EXTERIOR EXIT DOOR.

EVERY DOOR TO RECEIVE TYPE C NUMBER SIGN

GLAZING TYPES:

TYPE	THK	DESCRIPTION	LOCATION
GL-1		NOT USED	
GL-2	1"	CLR INSULATED TEMPERED GLAZING	INT
GL-3		NOT USED	
FPGL-1		45-MINUTE FIRE RATED GLAZING	INT
FPGL-2		90-MINUTE FIRE RATED GLAZING	INT

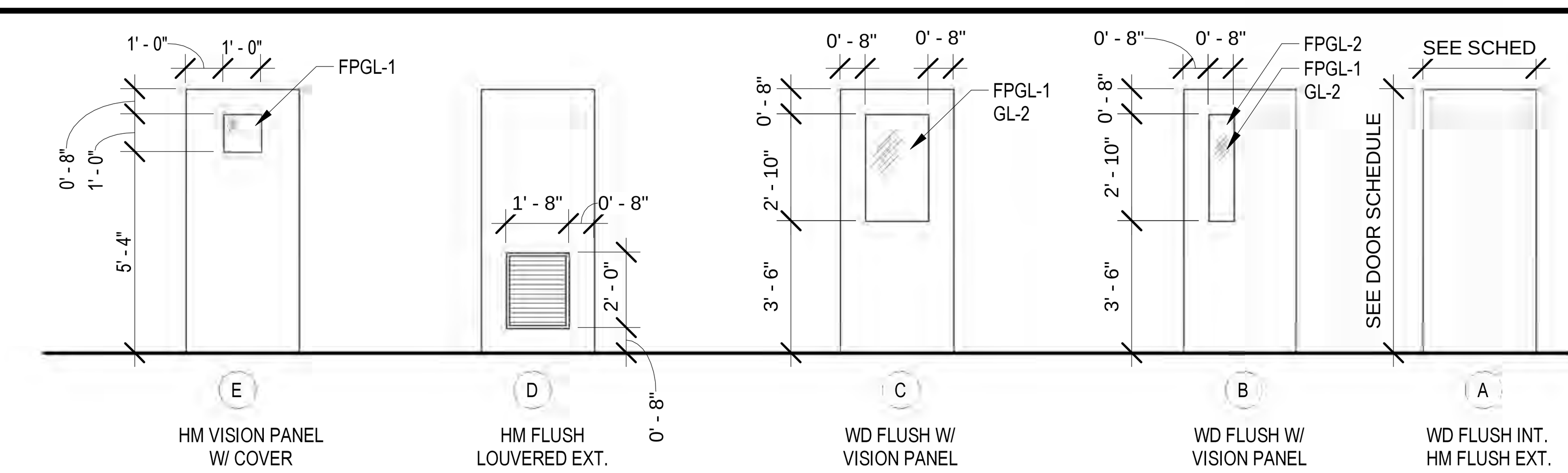

2 DOOR TYPES ELEVATIONS
SCALE: 1/4" = 1'-0"

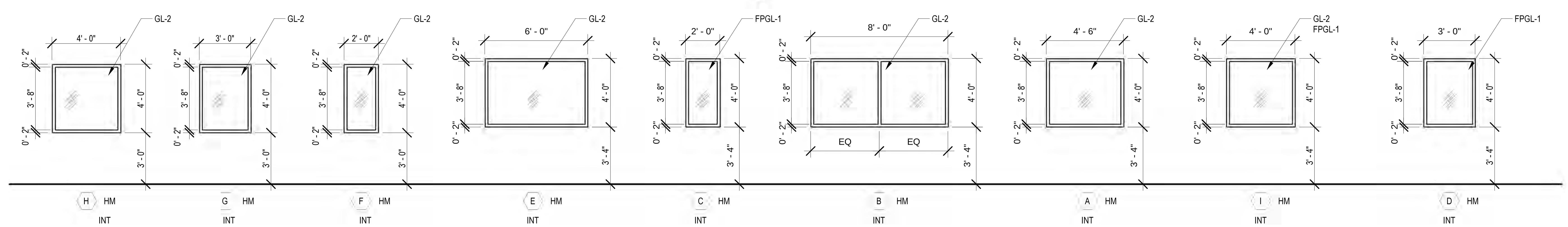

3 WINDOW TYPES ELEVATIONS
SCALE: 1/4" = 1'-0"

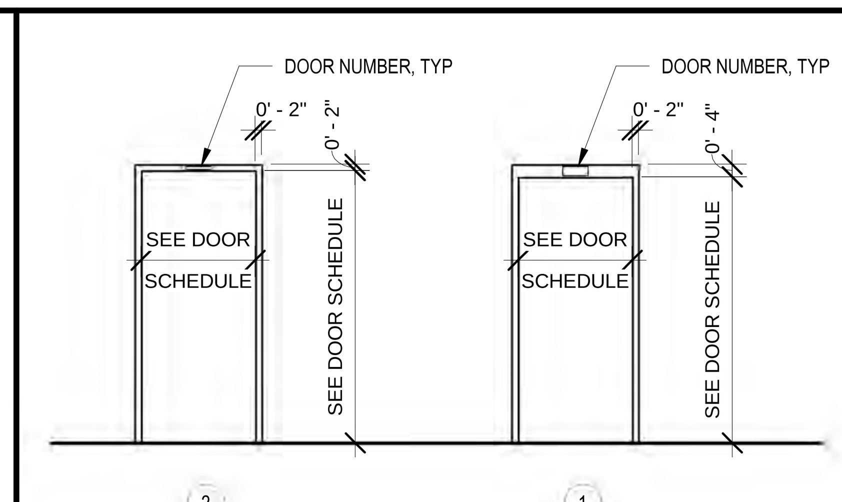

1 FRAME TYPE ELEVATIONS
SCALE: 1/4" = 1'-0"

LONG & ASSOCIATES
architects | engineers, inc.
4525 South Manhattan Avenue, Tampa, FL 33611-2305
T:813.839.0506 F:813.839.4616 AAC001624 1828 CGC1511025
www.longandassociates.com

THIS DOCUMENT IS COPYRIGHT MATERIAL. ANY DISCLOSURE, UNAUTHORIZED USE, DISSEMINATION OR DUPLICATION WITHOUT THE EXPRESS WRITTEN CONSENT OF LONG & ASSOCIATES IS PROHIBITED. ALL RIGHTS RESERVED

HILLSBOROUGH COUNTY SHERIFF'S OFFICE

PINEBROOK BUILDING 4 INTERIOR RENOVATION

1220 - 1238 TECH BLVD.
TAMPA, FL 33619

Seal

CHRISTOPHER K. RAWLINS, A.I.A.
AR100384

No.	Date	Issues & Revisions

TO THE BEST OF THE ARCHITECT'S AND/OR ENGINEER'S KNOWLEDGE THESE PLANS AND SPECIFICATIONS COMPLY WITH THE APPLICABLE MINIMUM BUILDING CODES AND THE APPLICABLE FIRE-SAFETY STANDARDS

Phase: 100% CONSTRUCTION DRAWINGS
Drawn By: JP
Checked By: CKR
Job No: 19002
Date: SEPTEMBER 20, 2019
10/25/2019 3:32:52 PM

DOOR SCHEDULE, DOOR & WINDOW TYPES

A8.1

ROOM FINISH SCHEDULE

NO.	NAME	FLOOR MAT/ FIN	BASE MAT	NORTH WALL MAT	EAST WALL MAT	SOUTH WALL MAT	WEST WALL MAT	CEILING MAT	CEILING HEIGHT	REMARKS
100A	LOBBY	NIC	NIC	P	P	P	P	2x2 ACT	9' - 0"	
101	WOMEN	CT	CT	P	P	P	P	2x2 MRT	9' - 0"	
102	MEN	CT	CT	P	P	P	P	2x2 MRT	9' - 0"	
103	FINGERPRINT	NIC	NIC	P	P	P	P	2x2 ACT	9' - 0"	
104	ADMIN.	NIC	NIC	P	P	P	P	2x2 ACT	9' - 0"	
104A	ADMIN.	NIC	NIC	P	P	P	P	2x2 ACT	9' - 0"	
104B	TEN / PRINT ANALYST	NIC	NIC	P	P	P	P	2x2 ACT	9' - 0"	
104C	OFFICE SUPS.	NIC	NIC	P	P	P	P	2x2 ACT	9' - 0"	
104D	DECD. FILES	NIC	NIC	P	P	P	P	2x2 ACT	9' - 0"	
105	OFFICE	NIC	NIC	P	P	P	P	2x2 ACT	9' - 0"	
106	OFFICE	NIC	NIC	P	P	P	P	2x2 ACT	9' - 0"	
107	OFFICE	NIC	NIC	P	P	P	P	2x2 ACT	9' - 0"	
108	OFFICE	NIC	NIC	P	P	P	P	2x2 ACT	9' - 0"	
109	FORENSICS DIR.	NIC	NIC	P	P	P	P	2x2 ACT	9' - 0"	
110	FUTURE OFFICE	NIC	NIC	P	P	P	P	2x2 ACT	9' - 0"	
111	MEN	CT	CT	P	P	P	P	2x2 MRT	9' - 0"	
111A	WATER HEATER CLOSET	NIC	NIC	P	P	P	P	2x2 ACT	9' - 0"	
112	WOMEN	CT	CT	P	P	P	P	2x2 MRT	9' - 0"	
113	COPY/ F.P. ROOM	NIC	NIC	P	P	P	P	2x2 ACT	9' - 0"	
114	OFFICE	NIC	NIC	P	P	P	P	2x2 ACT	9' - 0"	
115	OFFICE	NIC	NIC	P	P	P	P	2x2 ACT	9' - 0"	
116	OFFICE	NIC	NIC	P	P	P	P	2x2 ACT	9' - 0"	
117	A.F.I.S. GROUP	NIC	NIC	P	P	P	P	2x2 ACT	9' - 0"	
118	EVIDENCE STOR.	NIC	NIC	P	P	P	P	2x2 ACT	9' - 0"	
119	OFFICE	NIC	NIC	P	P	P	P	2x2 ACT	9' - 0"	
120	OFFICE	NIC	NIC	P	P	P	P	2x2 ACT	9' - 0"	
121	OFFICE	NIC	NIC	P	P	P	P	2x2 ACT	9' - 0"	
122	WORK/CONF. RM.	NIC	NIC	P	P	P	P	2x2 ACT	9' - 0"	
123	OFFICE	NIC	NIC	P	P	P	P	2x2 ACT	9' - 0"	
124	ELECTRICAL ROOM	NIC	NIC	P	P	P	P			NO CEILING
200	CORRIDOR	NIC	NIC	P	P	P	P	2x2 ACT	9' - 0"	
200A	CORRIDOR	NIC	NIC	P	P	P	P	2x2 ACT	9' - 0"	
200B	CORRIDOR	NIC	NIC	P	P	P	P	2x2 ACT	9' - 0"	
200C	CORRIDOR	NIC	NIC	P	P	P	P	2x2 ACT	9' - 0"	
200D	CORRIDOR	NIC	NIC	P	P	P	P	2x2 ACT	9' - 0"	
200E	CORRIDOR	NIC	NIC	P	P	P	P	2x2 ACT	9' - 0"	
200F	CORRIDOR	NIC	NIC	P	P	P	P	2x2 ACT	9' - 0"	
200G	CORRIDOR	NIC	NIC	P	P	P	P	2x2 ACT	9' - 0"	
200H	LOBBY	NIC	NIC	P	P	P	P	2x2 ACT	9' - 0"	
200J	CORRIDOR	NIC	NIC	P	P	P	P	2x2 ACT	9' - 0"	
200K	CORRIDOR	NIC	NIC	P	P	P	P	2x2 ACT	9' - 0"	
200L	CORRIDOR	NIC	NIC	P	P	P	P	2x2 ACT	9' - 0"	
200M	CORRIDOR	NIC	NIC	P	P	P	P	2x2 ACT	9' - 0"	
200N	CORRIDOR	NIC	NIC	P	P	P	P	2x2 ACT	9' - 0"	
200P	CORRIDOR	NIC	NIC	P	P	P	P	2x2 ACT	9' - 0"	
200Q	CORRIDOR	NIC	NIC	P	P	P	P	2x2 ACT	9' - 0"	
200R	CORRIDOR	NIC	NIC	P	P	P	P	2x2 ACT	9' - 0"	
200T	LOBBY	NIC	NIC	P	P	P	P	2x2 ACT	9' - 0"	
200U	CORRIDOR	NIC	NIC	P	P	P	P	2x2 ACT	9' - 0"	
200V	CORRIDOR	NIC	NIC	P	P	P	P	2x2 ACT	9' - 0"	
200W	CORRIDOR	NIC	NIC	P	P	P	P	2x2 ACT	9' - 0"	
201	ADMIN.	NIC	NIC	P	P	P	P	2x2 ACT	9' - 0"	
202	INTERVIEW	NIC	NIC	P	P	P	P	2x2 ACT	9' - 0"	
203	LIEUT.	NIC	NIC	P	P	P	P	2x2 ACT	9' - 0"	
204	ADMIN.	NIC	NIC	P	P	P	P	2x2 ACT	9' - 0"	
205	COPY ROOM	NIC	NIC	P	P	P	P	2x2 ACT	9' - 0"	
205A	WATER HEATER CLOSET	NIC	NIC	P	P	P	P	2x2 ACT	9' - 0"	
206	MAJOR	NIC	NIC	P	P	P	P	2x2 ACT	9' - 0"	
207	CAPTAIN	NIC	NIC	P	P	P	P	2x2 ACT	9' - 0"	
208	CONF. RM	NIC	NIC	P	P	P	P	2x2 ACT	9' - 0"	
209	VESTIBULE	NIC	NIC	P	P	P	P	2x2 ACT	9' - 0"	
210	MEN	CT	CT	P	P	P	P	2x2 MRT	9' - 0"	
211	VESTIBULE	NIC	NIC	P	P	P	P	2x2 ACT	9' - 0"	
212	WOMEN	CT	CT	P	P	P	P	2x2 MRT	9' - 0"	

ROOM FINISH SCHEDULE

NO.	NAME	FLOOR MAT/ FIN	BASE MAT	NORTH WALL MAT	EAST WALL MAT	SOUTH WALL MAT	WEST WALL MAT	CEILING MAT	CEILING HEIGHT	REMARKS
213	ROLL CALL	NIC	NIC	P	P	P	P	2x2 ACT	11' - 6"	
214	COPY	NIC	NIC	P	P	P	P	2x2 ACT	9' - 0"	
214A	DEPOSITION OFFICE	NIC	NIC	P	P	P	P	2x2 ACT	9' - 0"	
214B	MISSING PERSONS	NIC	NIC	P	P	P	P	2x2 ACT	9' - 0"	
214C	MISSING PERSONS (A)	NIC	NIC	P	P	P	P	2x2 ACT	9' - 0"	
215	TASK FORCE CONF. RM	NIC	NIC	P	P	P	P	2x2 ACT	9' - 0"	
216	HOMICIDE CONF. RM	NIC	NIC	P	P	P	P	2x2 ACT	9' - 0"	
217	WOMEN	CT	CT	P	P	P	P	2x2 MRT	9' - 0"	
218	MEN	CT	CT	P	P	P	P	2x2 MRT	9' - 0"	
218A	JANITOR	CT	CT	P	P	P	P	2x2 ACT	9' - 0"	
219	STORAGE	NIC	NIC	P	P	P	P	2x2 ACT	9' - 0"	
220	COLD CASE FILES	NIC	NIC	P	P	P	P	2x2 ACT	9' - 0"	
221	OFFICE	NIC	NIC	P	P	P	P	2x2 ACT	9' - 0"	
222	OFFICE	NIC	NIC	P	P	P	P	2x2 ACT	9' - 0"	
223	OFFICE	NIC	NIC	P	P	P	P	2x2 ACT	9' - 0"	
224	TRANSCRIPT.	NIC	NIC	P	P	P	P	2x2 ACT	9' - 0"	
225	OFFICE	NIC	NIC	P	P	P	P	2x2 ACT	9' - 0"	
226	TRANSCRIPT.	NIC	NIC	P	P	P	P	2x2 ACT	9' - 0"	
227	OFFICE	NIC	NIC	P	P	P	P	2x2 ACT	9' - 0"	
228	FUTURE OFFICE	NIC	NIC	P	P	P	P	2x2 ACT	9' - 0"	
229	FUTURE OFFICE	NIC	NIC	P	P	P	P	2x2 ACT	9' - 0"	
230	FUTURE OFFICE	NIC	NIC	P	P	P	P	2x2 ACT	9' - 0"	
231	NETWORK MDF	NIC	NIC	P	P	P	P	2x2 ACT	9' - 0"	
232	ELECTRICAL ROOM	NIC	NIC	P	P	P	P			NO CEILING
233	FUTURE OFFICE	NIC	NIC	P	P	P	P	2x2 ACT	9' - 0"	
234	BREAKROOM	NIC	NIC	P	P	P	P	2x2 ACT	9' - 0"	
234A	STORAGE	NIC	NIC	P	P	P	P	2x2 ACT	9' - 0"	
235	MEN	CT	CT	P	P	P	P	2x2 MRT	9' - 0"	
236	MAINT. OFFICE	NIC	NIC	P	P	P	P	2x2 ACT	9' - 0"	
237	MAINT. WAREHOUSE	NIC	NIC	P	P	P	P			NO CEILING
239	C.A.U.	NIC	NIC	P	P	P	P	2x2 ACT	9' - 0"	
240	ECONOMIC CRIMES	NIC	NIC	P	P	P	P	2x2 ACT	9' - 0"	
240A	CPL.	NIC	NIC	P	P	P	P	2x2 ACT	9' - 0"	
240B	SGT.	NIC	NIC	P	P	P	P	2x2 ACT	9' - 0"	
241	INTERVIEW	NIC	NIC	P	P	P	P	2x2 ACT	9' - 0"	
242	INTERVIEW	NIC	NIC	P	P	P	P	2x2 ACT	9' - 0"	
243	SECURE INTERVIEW	NIC	NIC	P	P	P	P	GWB	10' - 8"	GYP CEILING OVER 1/2" PLYWOOD
244	SECURE INTERVIEW	NIC	NIC	P	P	P	P	GWB	10' - 8"	GYP CEILING OVER 1/2" PLYWOOD
245	HOMICIDE	NIC	NIC	P	P	P	P	2x2 ACT	9' - 0"	
245A	SGT.	NIC	NIC	P	P	P	P	2x2 ACT	9' - 0"	
245B	CPL.	NIC	NIC	P	P	P	P	2x2 ACT	9' - 0"	
245C	CPL.	NIC	NIC	P	P	P	P	2x2 ACT	9' - 0"	
246	TRAFFIC HOMICIDE	NIC	NIC	P	P	P	P	2x2 ACT	9' - 0"	
246A	SGT.	NIC	NIC	P	P	P	P	2x2 ACT	9' - 0"	
246B	CPL.	NIC	NIC	P	P	P	P	2x2 ACT	9' - 0"	
247	S.P. DET	NIC	NIC	P	P	P	P	2x2 ACT	9' - 0"	
247A	S.P. DET	NIC	NIC	P	P	P	P	2x2 ACT	9' - 0"	
248	DET.	NIC	NIC	P	P	P	P	2x2 ACT	9' - 0"	
249	DET.	NIC	NIC	P	P	P	P	2x2 ACT	9' - 0"	
250	JUVENILE SECTION	NIC	NIC	P	P	P	P	2x2 ACT	9' - 0"	
250A	SGT.	NIC	NIC	P	P	P	P	2x2 ACT	9' - 0"	
250B	CPL.	NIC	NIC	P	P	P	P	2x2 ACT	9' - 0"	
250C	CPL.	NIC	NIC	P	P	P	P	2x2 ACT	9' - 0"	
251	ELECTRICAL	NIC	NIC	P	P	P	P			NO CEILING
252	BREAK ROOM	NIC	NIC	P	P	P	P	2x2 ACT	9' - 0"	
252A	K.I.T. GROUP	NIC	NIC	P	P	P	P	2x2 ACT	9' - 0"	
253	MEN	CT	CT	P	P	P	P	2x2 MRT	9' - 0"	
254	WOMEN	CT	CT	P	P	P	P	2x2 MRT	9' - 0"	
255	NETWORK IDF	NIC	NIC	P	P	P	P	2x2 ACT	9' - 0"	
255A	VESTIBULE	NIC	NIC	P	P	P	P	2x2 ACT	9' - 0"	
257	STORAGE	NIC	NIC	P	P	P	P	2x2 ACT	9' - 0"	
258	STORAGE	NIC	NIC	P	P	P	P	2x2 ACT	9' - 0"	
259	ELECTRICAL	NIC	NIC	P	P	P	P			NO CEILING
260	SERV. WINDOW	NIC	NIC	P	P	P	P	2x2 ACT	9' - 0"	
261	JANITOR	CT	CT	P	P	P	P	2x2 ACT	9' - 0"	

FINISH SCHEDULE LEGEND

ACT	ACOUSTICAL CEILING TILE
CT	CERAMIC TILE
GWB	GYPSUM WALL BOARD
MRT	MOISTURE RESISTANT CEILING TILE
NIC	NOT IN CONTRACT - INSTALLED BY OWNER
P	PAINT

LONG & ASSOCIATES
architects | engineers, inc.
4525 South Manhattan Avenue, Tampa, FL 33611-2305
T:813.839.0506 F:813.839.4616 AAC001624 1828 CGC1511025
www.longandassociates.com

THIS DOCUMENT IS COPYRIGHT MATERIAL. ANY DISCLOSURE, UNAUTHORIZED USE, DISSEMINATION OR DUPLICATION WITHOUT THE EXPRESS WRITTEN CONSENT OF LONG & ASSOCIATES IS PROHIBITED ALL RIGHTS RESERVED

HILLSBOROUGH COUNTY SHERIFF'S OFFICE

PINEBROOK BUILDING 4 INTERIOR RENOVATION

1220 - 1238 TECH BLVD.
TAMPA, FL 33619

Seal

CHRISTOPHER K. RAWLINS, A.I.A.
AR100384

No.	Date	Issues & Revisions

TO THE BEST OF THE ARCHITECT'S AND/OR ENGINEER'S KNOWLEDGE THESE PLANS AND SPECIFICATIONS COMPLY WITH THE APPLICABLE MINIMUM BUILDING CODES AND THE APPLICABLE FIRE-SAFETY STANDARDS

Phase: 100% CONSTRUCTION DRAWINGS
Drawn By: JP
Checked By: CKR
Job No: 19002
Date: SEPTEMBER 20, 2019
9/19/2019 5:07:47 PM

ROOM FINISH SCHEDULE

A8.2

TECHNICAL DATA

FROM

Anemostat

Door Products

4958 Stout Dr. #119, San Antonio, TX 78219
PH: 210.662.6300 • FAX: 210.662.2828
e-mail: door@anemostat.com • website: www.anemostat.com

FLDL-W

EXPANDABLE

FIRE RATED
FUSIBLE LINK LOUVER

FIRE RATINGS

B.S.-476.22
British Standard

BSEN-1634-1
Fire Resistance

UNDERWRITERS' LABORATORIES
FILE #R7776

DETAIL DRAWING

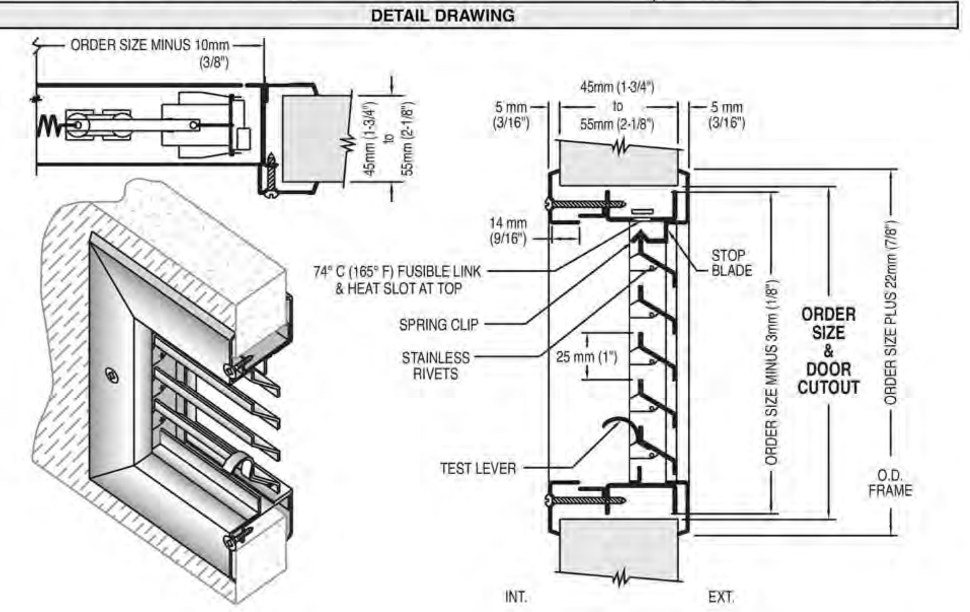

STANDARD PRODUCT FEATURES

- **MATERIAL:** 1.2 mm (18 GA) Galvanised Steel Frame and Louver Blades, 1.5 mm (16 GA) inner support members.
- **FINISH:** RAL 9006 Silver Baked Enamel, Gray Primer, Beige or Bronze Baked Enamel
- **INSTALLATION:** Self attaching using #8 x 25mm (1") or 38mm (1-1/2") phillips head screws that fasten the auxiliary frame to the louver core, thru the cut out in the door. The corridor side of the frame is free of fasteners for added security.
- **DOOR THICKNESS:** Expandable from 45mm (1-3/4") to 55mm (2-1/8") Metal or Wood Doors
- **CLOSING ASSEMBLY:** Stainless steel operating springs assure proper action with the closing mechanism.
- **AESTHETICS:** Tight mitered corners and countersunk mounting holes make for a clean appearance.
- **FREE AIR FLOW:** 40% Free Area.
- ***NOTE:*** For Exterior use, High Humidity or Salt Air application, product must be Galvanized or Stainless Steel.
- ***IMPORTANT:*** Interpretation of building and fire codes may vary. Consult with the local authority having jurisdiction in your area, to determine appropriate standards.

OPTIONAL FEATURES

- **MATERIAL:** #304 or #316 Stainless Steel, #4 Finish (Satin), Galvanised (Zinc Plated). Not available in Hot Dipped or Aluminum.
- **FINISH:** Custom Baked Enamel Colors (as per sample chip supplied by customer).
- **FASTENERS:** Special security screw fasteners
- **SPECIALS:** Fractional sizes not available. Height must be in even inches, 1" (25.4mm).

FIRE RATINGS

UL 10C with Classification Markings
- Approved Testing - 20/45/60/90 Minutes
  Max width 24" (610mm), max height 24" (610mm)
  Min width 10" (254mm), min height 6" (152mm)

BSEN-1634-1:2008 (Fire Resistance)
- Approved Testing - Timber Doors - *60 minutes (E-60)
  Max width 24" (610mm), max height 24" (610mm)
  Min width 10" (254mm), min height 6" (152mm).
  *Must be used with Zero Plus Intumescent Aperture Liner

BS 476.22
- Approved Testing - Steel Doors - 120 Minutes (E-120)
  Max width 24" (610mm), max height 24" (610mm)
  Min width 10" (254mm), min height 6" (152mm)

Job Name & Location	Submitted by

For Most Current Info, Consult Factory or check our website, www.anemostat.com

MAY 2017
LOUVERS PAGE 7

14 MANUFACTURERS SPECS ON FIRE RATED LOUVER
SCALE: NTS

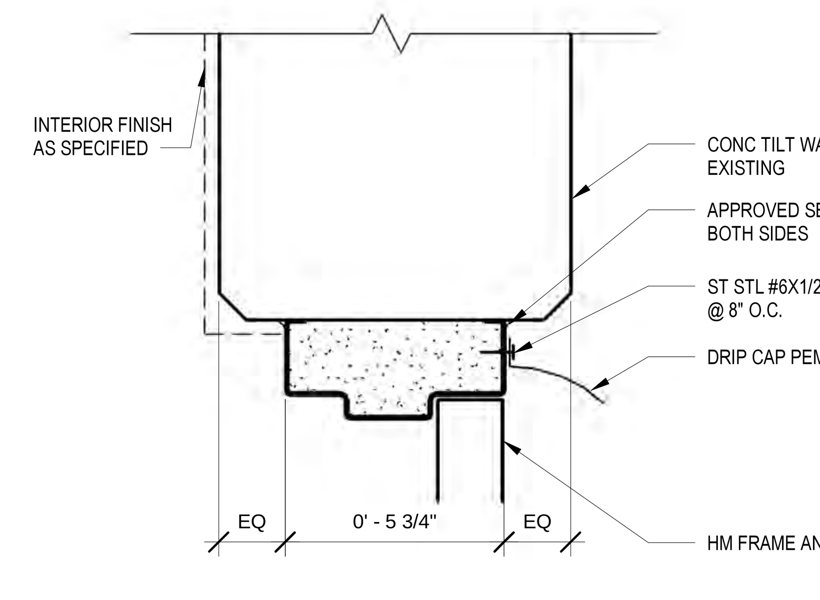

12 EXTERIOR DOOR HEAD DETAIL
SCALE: 3" = 1'-0"

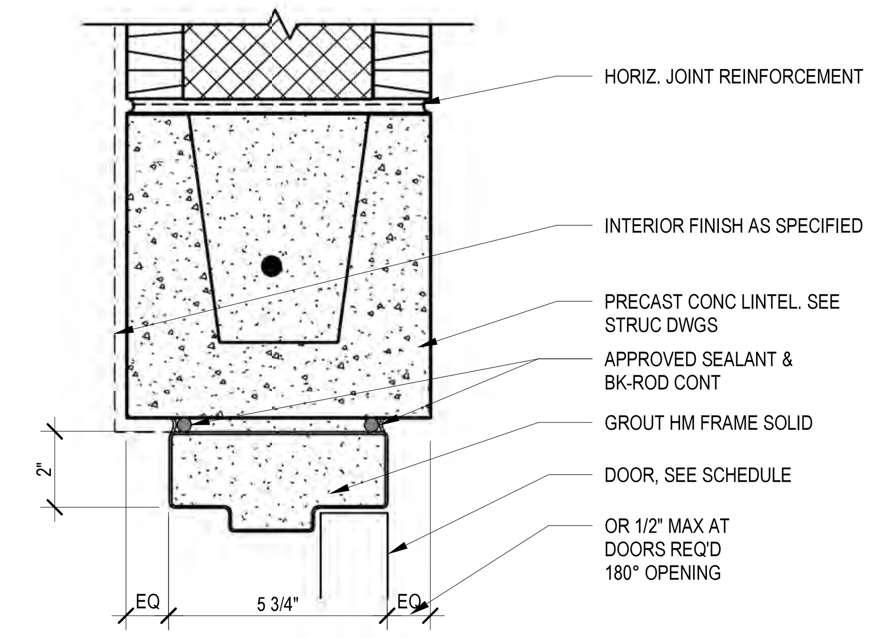

8 INTERIOR DOOR HEAD DETAIL CMU WALL
SCALE: 3" = 1'-0"

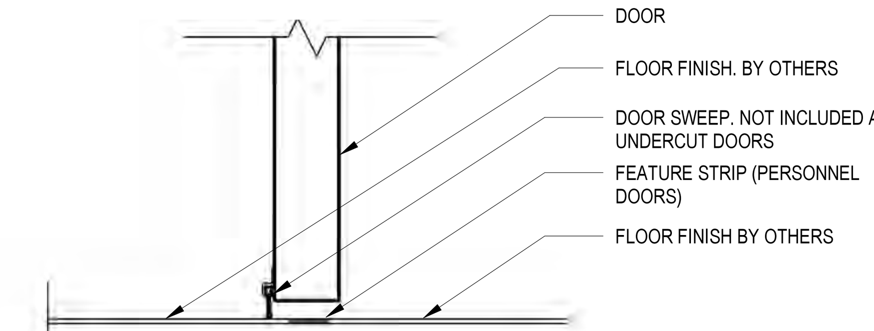

4 INTERIOR DOOR THRESHOLD DETAIL
SCALE: 3" = 1'-0"

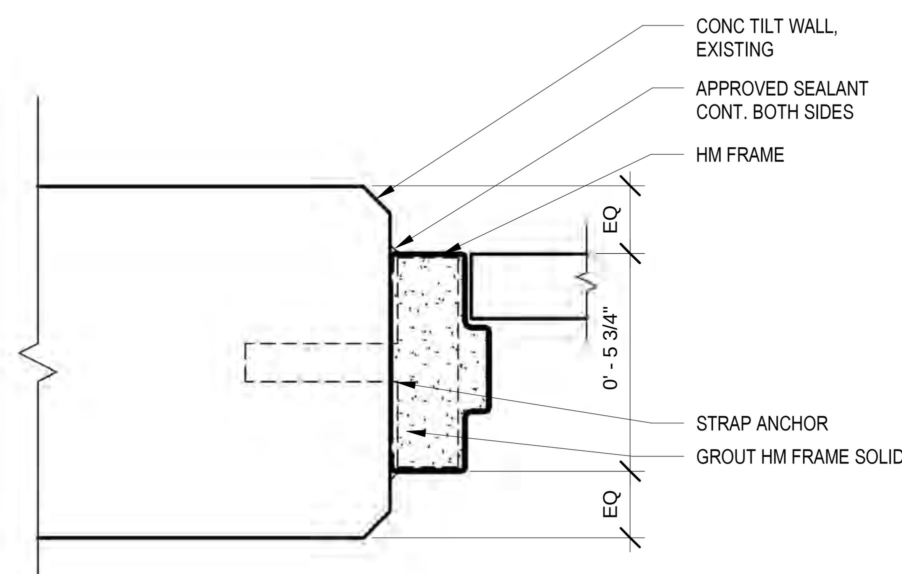

11 EXTERIOR DOOR JAMB DETAIL
SCALE: 3" = 1'-0"

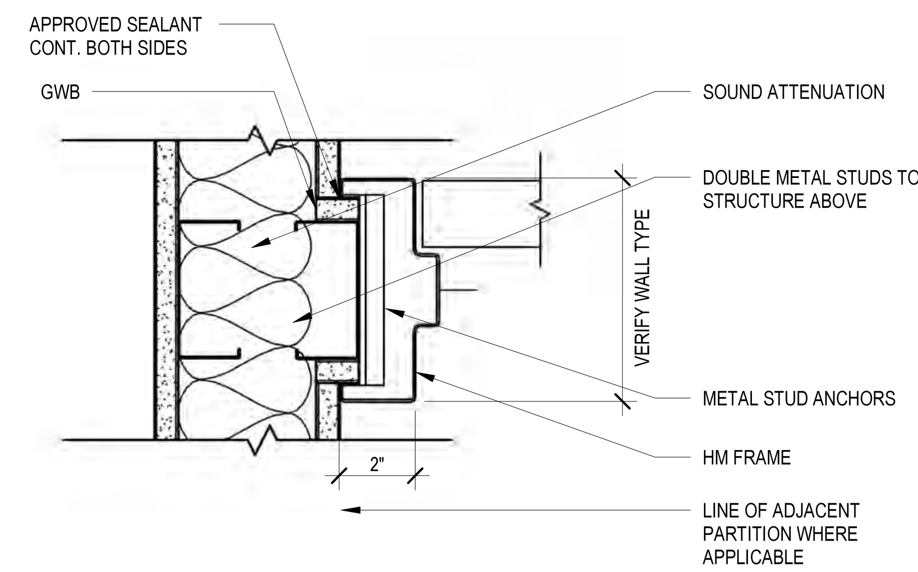

7 INTERIOR DOOR JAMB DETAIL STUD WALL
SCALE: 3" = 1'-0"

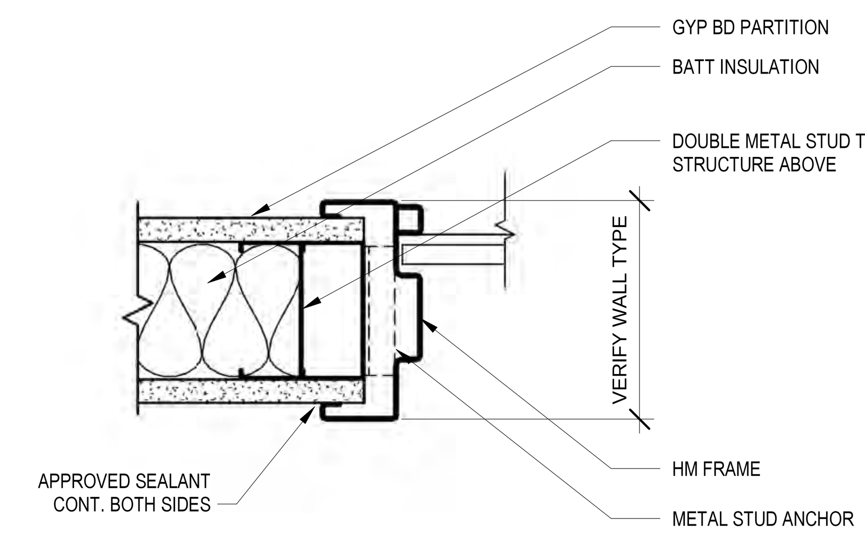

3 INTERIOR WINDOW JAMB DETAIL
SCALE: 3" = 1'-0"

TRUDOOR™

PYRAN® PLATINUM F FIRE-RATED SAFETY GLASS

20-1 80 Minute Premium Filmed Fire Protective Safety Ceramic

Manufactured by SCHOTT® Technical Glass Solutions - PYRAN® Platinum F is a fire-protection-rated and impact-safety-rated glazing material made from a transparent glass-ceramic with thickness of 3/16". It has a surface applied safety film and is intended for use in safety-rated locations such as door lites, transoms or sidelites, and windows with fire-rating requirements up to 90 minutes and up to 180 minutes in doors.

Features:

- Clear and colorless - Transparent and wireless
- Fully tested and approved - UL Classified and Labeled
- Fire-rated up to 90 minutes (180 minutes in doors) w/ required hose stream test
- Impact-safety rated to ANSI Z97.1 and CPSC 16CFR1201 (Cat. I and II)
- Passes positive pressure test standard UL 10C
- Withstands thermal shock
- Surface-applied safety film
- Smooth surface and distortion-free mirror finish
- Sound Transmission Rating: STC 31 dB
- Visible Transmission: 80%
- Large sizes available: up to 51" x 99"
- Thickness: 3/16" (5mm) - Weight: 2.6 lbs/ft2

CLASSIFIED c UL US

Environmentally Friendly

Produced without hazardous heavy metals antimony and arsenic

Listings and Standards:

Fire-Rating	Application	Max Exposed Area	Max Exposed Width	Max Exposed Height
up to 90 minutes	Other than Doors	4,933 in²	98-1/4"	98-1/4"
up to 90 minutes	Doors (non-temp rise)	3,708 in²	37-3/4"	98-1/4"
up to 180 minutes	Doors	100 in²	12"	33"

UL 9, UL 10B, UL 10C, NFPA 80, NFPA 252, NFPA 257, ASTM E2074, ASTM E2010-01, CPSC ANSI Z97.1, ULC CAN4-S104, ULC CAN4-S106.

Classified and labeled by Underwriters Laboratories, Inc. for the United States and Canada with File - No. R39507 and/or R25738 . All fire tests performed in accordance with UL 9, UL 10C, UBC 7-2 (1997), UBC 7-4 (1997), NFPA 252, NFPA 257, NFPA 80 , ASTM E2010-01, ASTM E2074-00, CAN /ULC - S104, and CAN /ULC - S106. All listing information is subject to change.
Note: This product is not considered a barrier to radiant heat and has not met the ASTM E-119 or UL 263 test standards.

® PYRAN is a registered trademark of SCHOTT AG.

TRUDOOR.COM | 1-844-TRUDOOR   TRUDOOR® | PHOENIX, AZ

13 MANUFACTURERS SPECS ON FIRE RATED GLAZING
SCALE: NTS

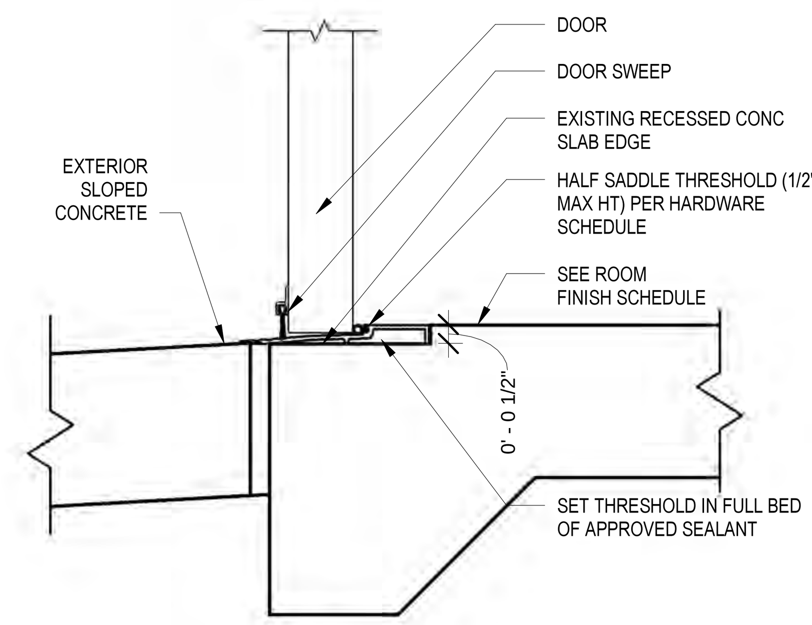

10 EXTERIOR DOOR THRESHOLD DETAIL
SCALE: 3" = 1'-0"

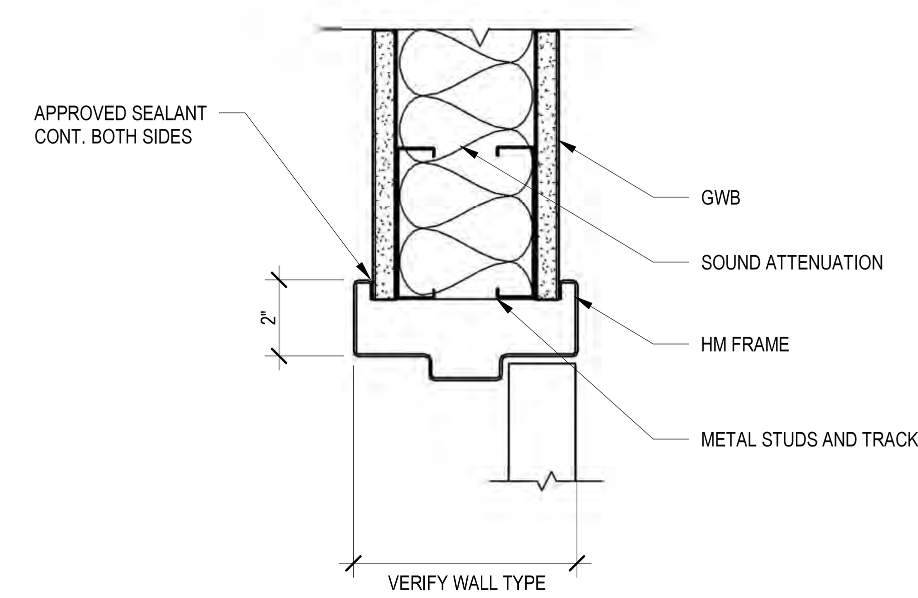

6 INTERIOR DOOR HEAD DETAIL STUD WALL
SCALE: 3" = 1'-0"

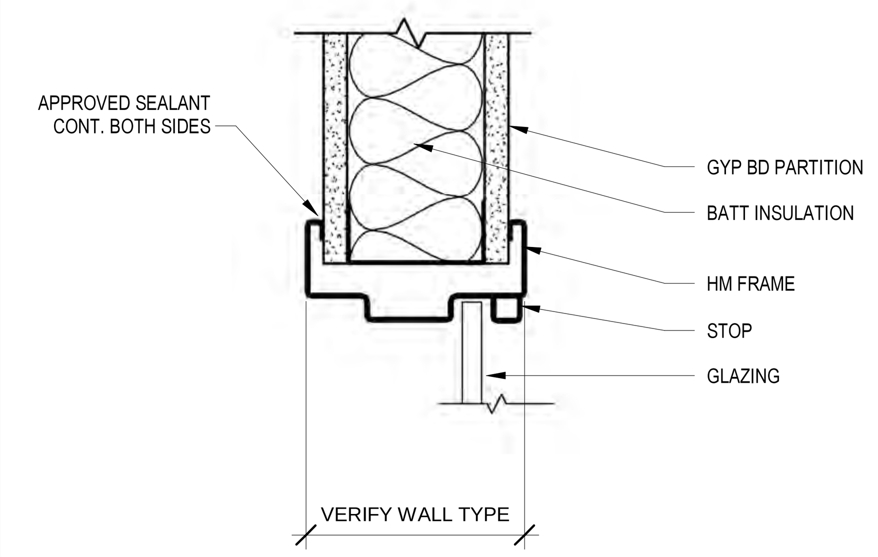

2 INTERIOR WINDOW HEAD DETAIL
SCALE: 3" = 1'-0"

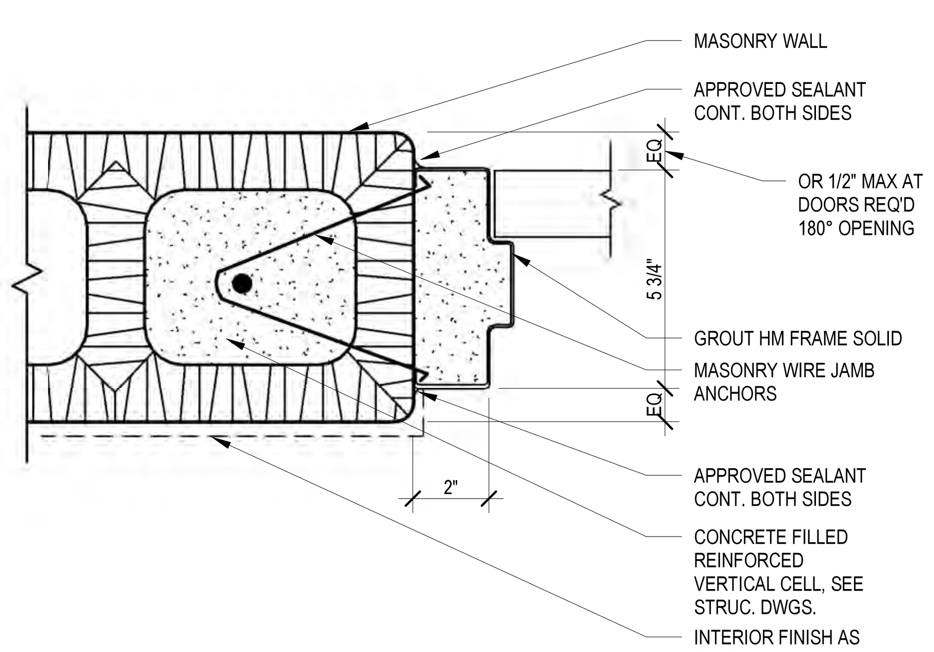

9 INTERIOR DOOR JAMB DETAIL CMU WALL
SCALE: 3" = 1'-0"

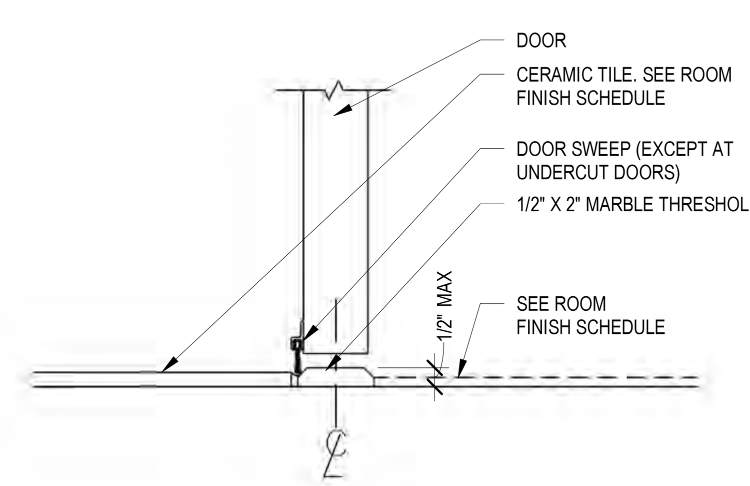

5 INTERIOR DOOR THRESHOLD DETAIL
SCALE: 3" = 1'-0"

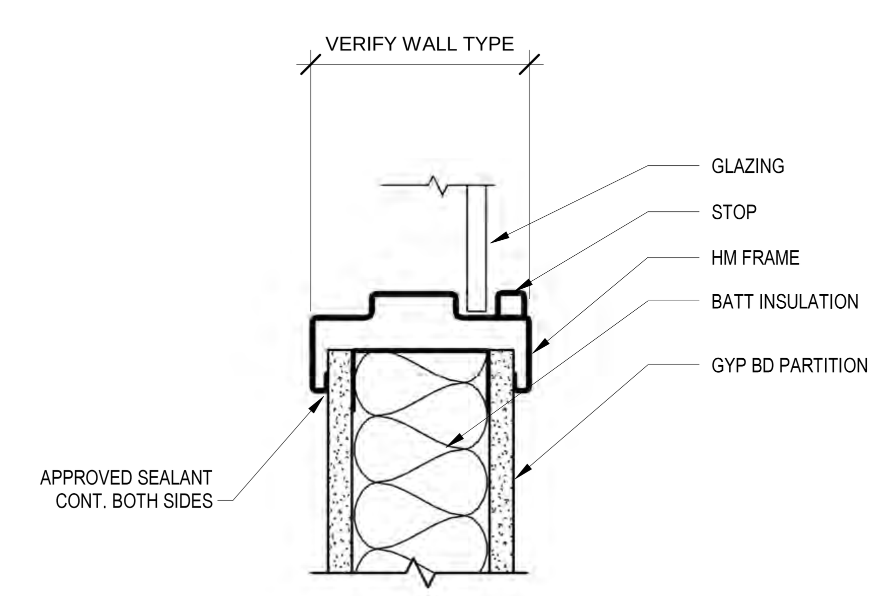

1 INTERIOR WINDOW SILL DETAIL
SCALE: 3" = 1'-0"

LONG & ASSOCIATES
architects | engineers, inc.
4525 South Manhattan Avenue, Tampa, FL 33611-2305
T:813.839.0506 F:813.839.4616 AAC001624 1828 CGC1511025
www.longandassociates.com

THIS DOCUMENT IS COPYRIGHT MATERIAL. ANY DISCLOSURE, UNAUTHORIZED USE, DISSEMINATION OR DUPLICATION WITHOUT THE EXPRESS WRITTEN CONSENT OF LONG & ASSOCIATES IS PROHIBITED ALL RIGHTS RESERVED

HILLSBOROUGH COUNTY SHERIFF'S OFFICE

PINEBROOK BUILDING 4 INTERIOR RENOVATION

1220 - 1238 TECH BLVD.
TAMPA, FL 33619

Seal

CHRISTOPHER K. RAWLINS, A.I.A.
AR100384

No.	Date	Issues & Revisions

TO THE BEST OF THE ARCHITECT'S AND/OR ENGINEER'S KNOWLEDGE THESE PLANS AND SPECIFICATIONS COMPLY WITH THE APPLICABLE MINIMUM BUILDING CODES AND THE APPLICABLE FIRE-SAFETY STANDARDS

Phase:	100% CONSTRUCTION DRAWINGS
Drawn By:	JP
Checked By:	CKR
Job No:	19002
Date:	SEPTEMBER 20, 2019

10/25/2019 3:33:00 PM

DOOR & WINDOW DETAILS

A8.3

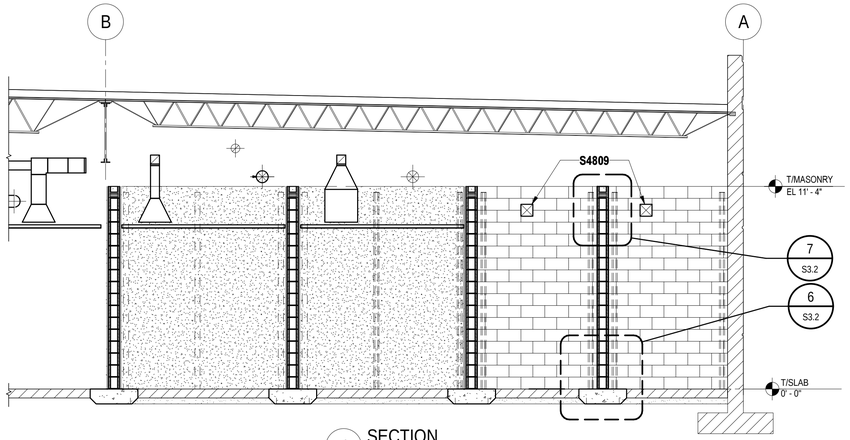

4 SECTION
SCALE: 1/4" = 1'-0"

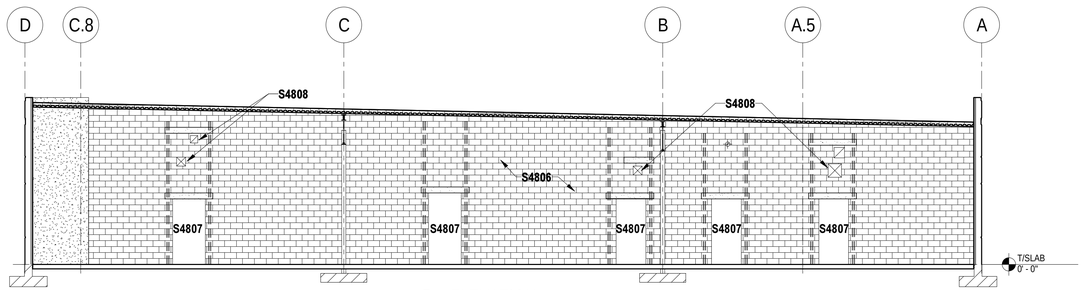

3 ELEVATION
SCALE: 1/8" = 1'-0"

MINIMUM COMPONENT & CLADDING NOMINAL DESIGN WIND PRESSURES (PSF)					
		EFFECTIVE WIND AREA (SQFT)			
SURFACE	ZONE	10	50	100	150 OR GREATER
ROOF FIELD	1	13 / -31	11 / -30	10 / -29	10 / -29
ROOF EDGE	2	13 / -52	11 / -40	10 / -34	10 / -34
ROOF CORNER	3	13 / -72	11 / -47	10 / -34	10 / -34
WALL FIELD	4	29 / -31	26 / -28	25 / -27	24 / -26
WALL CORNER	5	29 / -38	26 / -33	25 / -30	24 / -28

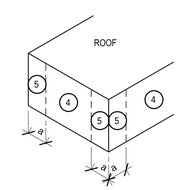

WALL ZONES (ISOMETRIC)
NOTE: WIDTH OF EDGE STRIP "a" = 8'-0"

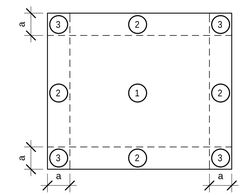

ROOF ZONES (PLAN)
NOTE: WIDTH OF EDGE STRIP "a" = 8'-0"

>>COMPONENT & CLADDING NOTES:
CC1. ALL COMPONENT & CLADDING MATERIALS NOT SPECIFICALLY DESIGNED OR OTHERWISE NOTED ON THESE DWGS SHALL SAFELY RESIST THESE MINIMUM DESIGN WIND PRESSURES FOR THE SUBJECT MEMBER'S EFFECTIVE WIND AREA AS WELL AS THE WIND PRESSURES RESULTING FROM THE DESIGN WIND SPEED AND APPLICABLE CODES AS INDICATED ON THE STRUCTURAL NOTES AND SPECIFICATIONS (WHICHEVER ARE GREATER). THE EFFECTIVE WIND AREA SHALL BE DEFINED AS THE SPAN LENGTH MULTIPLIED BY AN EFFECTIVE WIDTH THAT NEED NOT BE LESS THAN ONE-THIRD THE SPAN LENGTH. FOR CLADDING FASTENERS, THE EFFECTIVE WIND AREA SHALL NOT BE GREATER THAN THE AREA THAT IS TRIBUTARY TO AN INDIVIDUAL FASTENER.
CC2. DESIGN WIND ZONES INDICATED SHALL BE LOCATED IN ACCORDANCE WITH THE ADJACENT SCHEMATIC WALL ZONE LOCATION DIAGRAMS.
CC3. PLUS AND MINUS SIGNS SIGNIFY GROSS COMPONENT PRESSURES ACTING TOWARD AND AWAY FROM BLDG SURFACES.
CC4. FOR EFFECTIVE AREAS BETWEEN THOSE LISTED, THE LOAD MAY BE INTERPOLATED OR USE THE LOAD ASSOCIATED WITH THE LOWER AREA.

2 MINIMUM COMPONENT & CLADDING NOMINAL DESIGN WIND PRESSURES
SCALE: NTS

KEYNOTE LEGEND

NO.	DESCRIPTION
S3381	ISOLATED EXTERIOR EQUIPMENT PAD, SEE 'TYP EQUIPMENT PADS'
S4806	EXISTING 8" MASONRY WALL SYSTEM
S4807	EXISTING 8" MASONRY WALL WITH NEW OPENING. REFER TO PRECAST LINTEL INSTALLATION @ EXISTING CMU WALL DETAIL 2/S3.2 & TYP RETROFIT FILLED CELL MASONRY REINFORCEMENT DETAIL 4/S3.2
S4808	MECH DUCT PENETRATION THROUGH EXISTING CMU WALL, INSTALL LINTELS AS REQUIRED. SEE MECH DWGS.
S4809	MECH DUCT PENETRATION THROUGH CMU WALL, INSTALL LINTELS AS REQUIRED. SEE MECH DWGS
SX3005	EXISTING CONCRETE SLAB.

NOTE:

1. REFER TO DWG S3.1 FOR "STRUCTURAL NOTES"

2. REFER TO DETAIL 3 ON DWG S3.1 FOR "TYP CONCRETE SLAB INFILL PATCH" CONTRACTOR TO COORDINATE WITH ARCHITECTURAL, PLUMBING, MECHANICAL & ELECTRICAL DWGS.

3. REFER TO DETAIL 1 ON DWG S3.1 VAPOR RETARDER UNDER SLAB ON GRADE.

4. REFER TO DETAIL 2 ON DWG S3.1 FOR "GRADE 60 REINF HOOK & LAP SPLICE SCHEDULE.

5. REFER TO ISOMETRIC DETAIL 1 ON DWG S3.2 FOR "TYPICAL MASONRY WALL REINF W/ BOND BEAM"

6. REFER TO DETAIL 3 ON DWG S3.2 FOR "PRE-CAST LINTEL SCHEDULE"

7. REFER TO DETAIL 8 ON DWG S3.2 FOR "CONTINUITY OF FTG REINF @ CORNER & INTERSECTIONS"

8. REFER TO DETAIL 9 ON DWG S3.2 FOR "CONTINUITY OF MASONRY BOND BEAM REINF @ CORNERS & INTERSECTIONS"

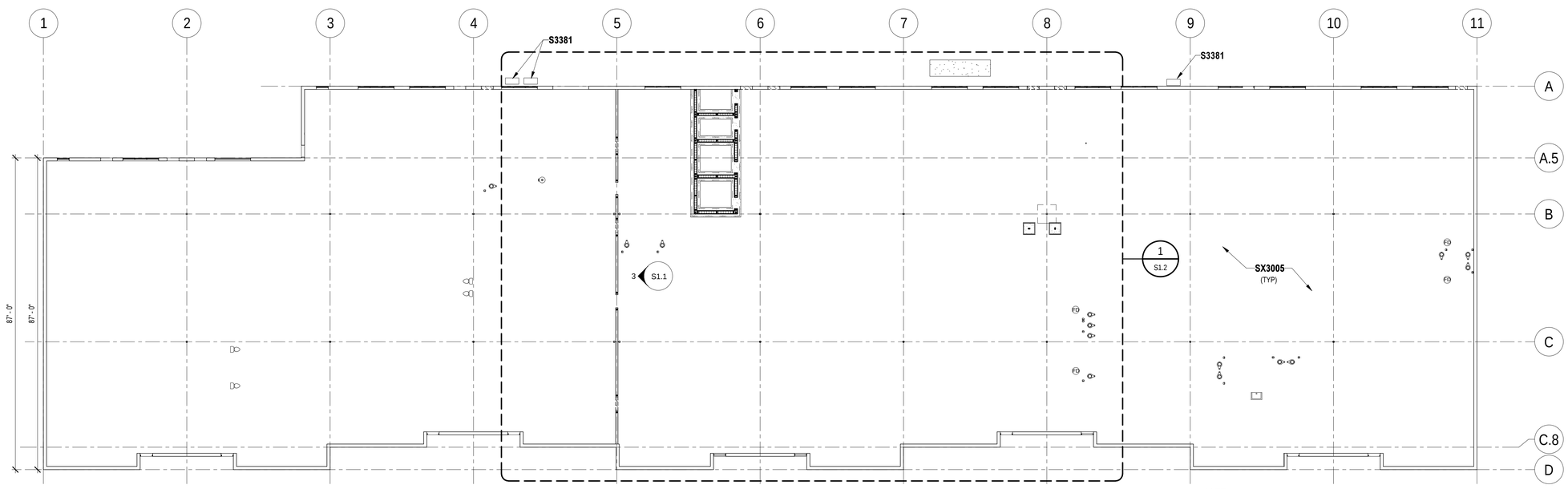

N 1 OVERALL SLAB PLAN
SCALE: 1/16" = 1'-0"

NOTE:
CONTRACTOR TO COORDINATE LOCATION AND EXTENT OF REMOVAL OF EXISTING SLAB WITH ARCH, MECH, ELEC, & STRUCT DWGS. CONTRACTOR SHALL REFER TO CONCRETE SLAB INFILL PATCH DETAIL 3/S3.1 AS REQUIRED FOR NEW WORK.

LONG & ASSOCIATES
architects | engineers, inc.
4525 South Manhattan Avenue, Tampa, FL 33611-2305
T:813.839.0506 F:813.839.4616 AA C001624 IBDB CGC1511025
www.longandassociates.com

THIS DOCUMENT IS COPYRIGHTED IN A LIMITED LICENSE HAS PERMITTED TO ESTIMATION, REVIEW AND CONSTRUCTION PURPOSES WITHIN CONJUNCT DEVELOPED & ASSOCIATES PROPERTY. ALL RIGHTS RESERVED

HILLSBOROUGH COUNTY SHERIFF'S OFFICE

PINEBROOK BUILDING 4 INTERIOR RENOVATION

1220 - 1238 TECH BLVD.
TAMPA, FL 33619

Seal

PAUL E. WIECZOREK, P.E.
PE 52804

No.	Date	Issues & Revisions

TO THE BEST OF THE ARCHITECT'S AND/OR ENGINEER'S KNOWLEDGE THESE PLANS AND SPECIFICATIONS COMPLY WITH THE APPLICABLE MINIMUM BUILDING CODES AND THE APPLICABLE FIRE-SAFETY STANDARDS

Phase: 100% CONSTRUCTION DRAWINGS
Drawn By: L&A
Checked By: PW
Job No: 19002
Date: SEPTEMBER 20, 2019
9/20/2019 8:51:51 AM

OVERALL SLAB PLAN

S1.1

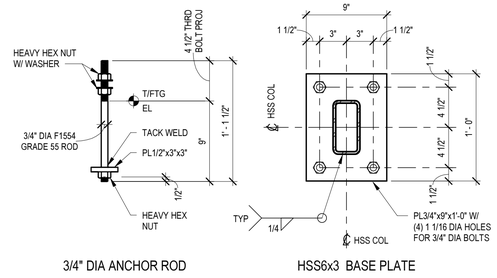

4 DETAIL
SCALE: 1 1/2" = 1'-0"

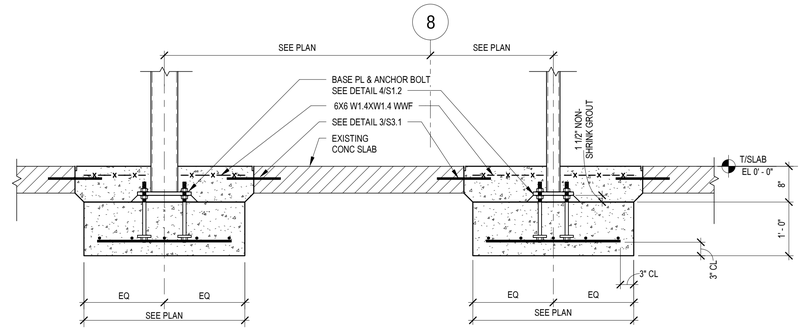

3 SECTION
SCALE: 3/4" = 1'-0"

KEYNOTE LEGEND

NO.	DESCRIPTION
S3102	FOR REINFORCEMENT CONTINUITY AT INTERSECTING ELEMENTS SEE "CONTINUITY OF FDN REINF @ CORNERS & INTERSECTIONS".
S3106	DRILL & EPOXY GROUT #5 X 2'-6" @ 12" OC INTO CENTER OF EXST FTG W/ 12" EMBEDMENT (MIN 2 DOWELS)
S3117	CONCRETE FOOTING WITH SLAB INFILL - SEE SECTION
S3325A	10" (MIN) 4,000 PSI CONC SLAB ON GRADE REINFORCED W/ #7 @ 12"OC EW T&B OVER COMPACTED FILL.
S3381	ISOLATED EXTERIOR EQUIPMENT PAD, SEE 'TYP EQUIPMENT PADS'
S4002	8" MASONRY WALL SYSTEM
S4010	VERTICAL FILLED CELL MASONRY WALL REINFORCING
S4807	EXISTING 8" MASONRY WALL WITH NEW OPENING. REFER TO PRECAST LINTEL INSTALLATION @ EXISTING CMU WALL DETAIL 2/S3.2 & TYP RETROFIT FILLED CELL MASONRY REINFORCEMENT DETAIL 4/S3.2
S5329	3/4" BASE PLATE W/ (4) 3/4" DIA BOLTS - SEE DETAIL
SX3005	EXISTING CONCRETE SLAB.
SX3101	EXISTING CONCRETE FOUNDATION PROTECT & MAINTAIN
SX5001	EXISTING STEEL COLUMN PROTECT & MAINTAIN

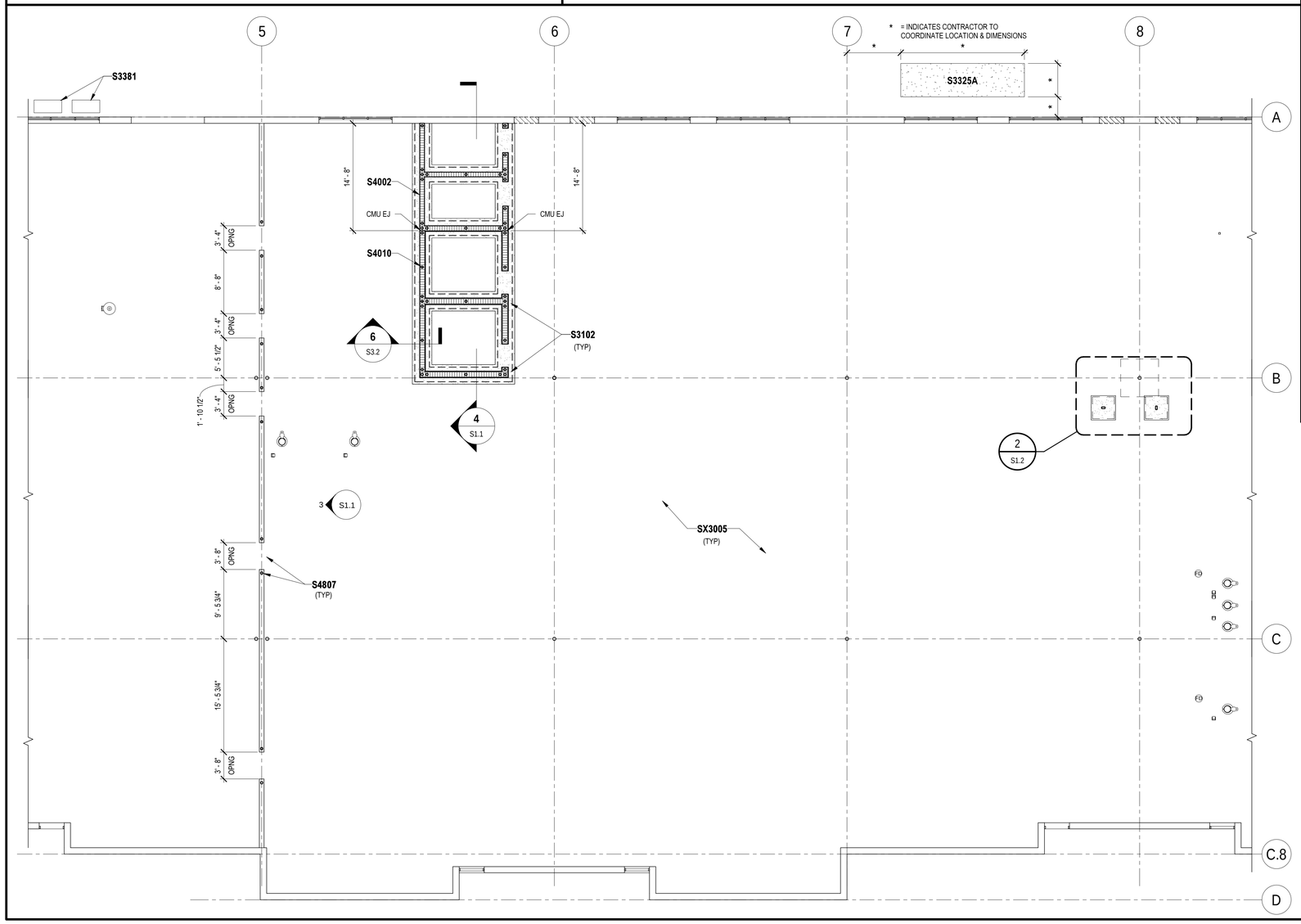

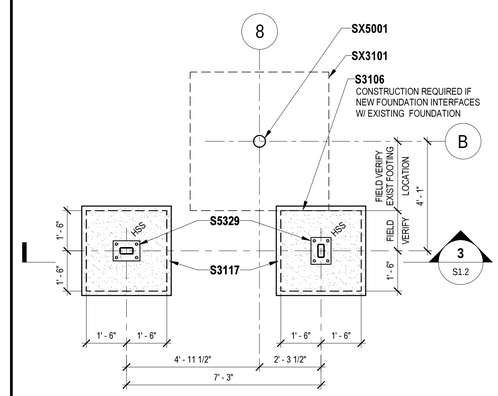

NOTE:
HSS = INDICATES HSS6x3x5/16 COLUMN

2 HSS6x3 COLUMN FOUNDATION
SCALE: 3/8" = 1'-0"

LEGEND

= INDICATES VERTICAL REBAR IN GROUT FILLED CELL OF NEW MASONRY WALL REF "TYP VERT FILLED CELL MASONRY REINFORCEMENT (UON)" REFER TO DETAIL 5 ON DWG S3.2 & "TYPICAL MASONRY WALL REINF W/ BOND BEAMS" REFER TO ISOMETRIC DETAIL 1 ON DWG S3.2.

= INDICATES NEW VERTICAL REBAR IN GROUT FILLED CELL AT EXISTING MASONRY WALL REF "TYP RETROFIT FILLED CELL MASONRY REINFORCEMENT" DETAIL 4 ON DWG S3.2

CMU EJ = INDICATES MASONRY CONTROL JOINT - REFER TO DETAIL 11 ON DWG S3.2

N

1 PARTIAL SLAB PLAN
SCALE: 1/8" = 1'-0"

LONG & ASSOCIATES
architects | engineers, inc.
4525 South Manhattan Avenue, Tampa, FL 33611-2305
T:813.839.0506 F:813.839.4616 AAC001624 IB28 CGC1511025
www.longandassociates.com

THIS DOCUMENT IS COPYRIGHTED IN A LIMITED FORM. NO PERMITTED USE, REPRODUCTION OR DISTRIBUTION WITHOUT PRIOR WRITTEN CONSENT OF LONG & ASSOCIATES INC. ALL RIGHTS RESERVED.

HILLSBOROUGH COUNTY SHERIFF'S OFFICE

PINEBROOK BUILDING 4 INTERIOR RENOVATION

1220 - 1238 TECH BLVD.
TAMPA, FL 33619

Seal

PAUL E. WIECZOREK, P.E.
PE 52804

No.	Date	Issues & Revisions

TO THE BEST OF THE ARCHITECT'S AND/OR ENGINEER'S KNOWLEDGE THESE PLANS AND SPECIFICATIONS COMPLY WITH THE APPLICABLE MINIMUM BUILDING CODES AND THE APPLICABLE FIRE-SAFETY STANDARDS

Phase: 100% CONSTRUCTION DRAWINGS
Drawn By: L&A
Checked By: PW
Job No: 19002
Date: SEPTEMBER 20, 2019
9/20/2019 8:53:07 AM

PARTIAL SLAB PLAN

S1.2

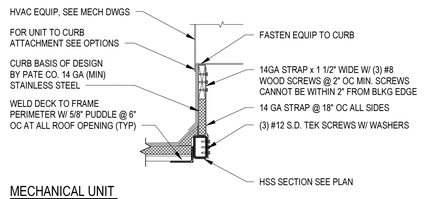

MECHANICAL UNIT ATTACHMENT OPTIONS:

1. STRAP ALL ROOFTOP UNITS TO CURBS W/ 3" WIDE STRAPS x 14 GA (MIN) @ 3'-0" OC FASTEN STRAP TO UNIT W/ #10 TEK SCREWS W/ WATER TIGHT WASHERS @ 12" OC AROUND (3) SIDES. FASTEN STRAP TO CURB AND BLKG INFILL W/ (2) 3/8" THRU-BOLTS
2. CLIP ALL ROOFTOP UNITS TO CURBS W/ 14 GA CONT PLATE FASTENED TO THE CURB W/ 3/8" THRU-BOLTS @ 12" OC AND FASTENED TO THE UNIT W/ #10 SCREWS @ 3" OC ON THE UNIT SHORT SIDE AND 12" OC ON THE MECH UNIT LONG SIDE
3. STRAP ALL ROOFTOP FAN COWLINGS AND VENT HOODS W/ (4) STAINLESS STEEL, 3/8" DIAMETER CABLES (OR EQUIVALENT G90 HOT-DIP GALVANIZED STRAPS) SECURE TO THE COWLING AND CURB

NOTE:

1. ALL STEEL RODS, PLATES, & SHIMS SHALL BE GALVANIZED
2. ALL DEVIATIONS TO THE ANCHORAGE REQUIREMENTS MUST BE VERIFIED WITH CALCULATIONS SIGNED AND SEALED BY A CURRENTLY REGISTERED SPECIALTY STRUCTURAL ENGINEER PRACTICING IN THE STATE OF FLORIDA, DESIGN AND INSTALLED TO RESIST WIND PRESSURES ON THE EQUIPMENT AND THE SUPPORTS AS DETERMINED IN ACCORDANCE WITH THE CURRENT FLORIDA BUILDING CODE PROVIDED IN THE STRUCTURAL NOTES AND THESE DRAWINGS (AT NO ADDITIONAL COST TO THE OWNER)
3. ALL ROOF TOP EQUIPMENT SHALL BE RESISTANT TO PENETRATION BY FLYING MISSLES PER ASTM E1886, ASTM E1996, OR MIAMI DADE TAS 201, OR 203.

MIN ROOF MOUNTED MECH EQUIP ANCHORAGE

4 DETAIL
SCALE: NTS

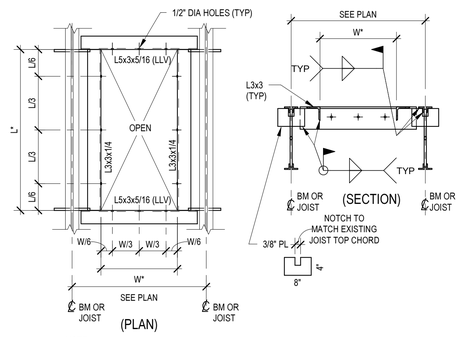

NOTE:
1. *VERIFY SIZE & LOCATION DIMENSIONS OF ALL ROOF OPENINGS W/ ARCH & MECH DWGS
2. PROVIDE FRAMES FOR OPNGS 8" OR LARGER
3. **WELD DECK TO FRAME PERIMETER WITH 5/8" PUDDLE @ 6" OC AT ALL ROOF OPENING (TYP).**

TYP ROOF OPNG FRMG (UON)

3 DETAIL
SCALE: NTS

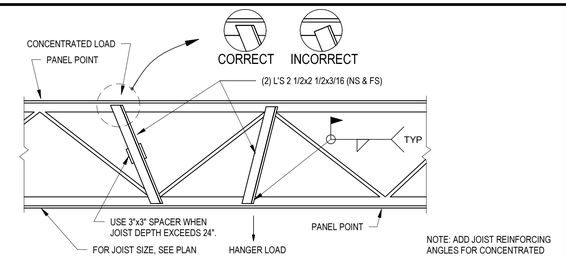

NOTE: ADD JOIST REINFORCING ANGLES FOR CONCENTRATED LOADS WHICH DO NOT FALL AT A PANEL POINT.

TYP JOIST REINFORCEMENT @ CONCENTRATED LOADS (UON)

5 DETAIL
SCALE: NTS

KEYNOTE LEGEND

NO.	DESCRIPTION

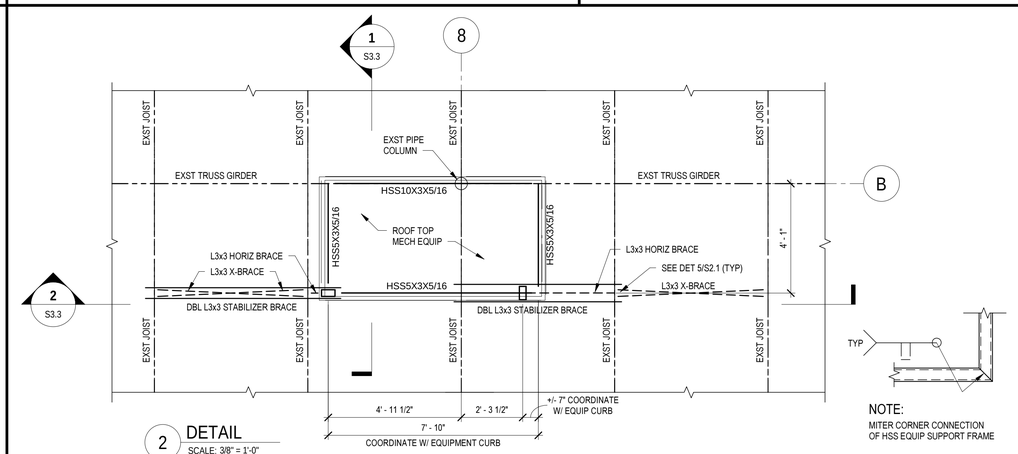

2 DETAIL
SCALE: 3/8" = 1'-0"

NOTE:
MITER CORNER CONNECTION OF HSS EQUIP SUPPORT FRAME

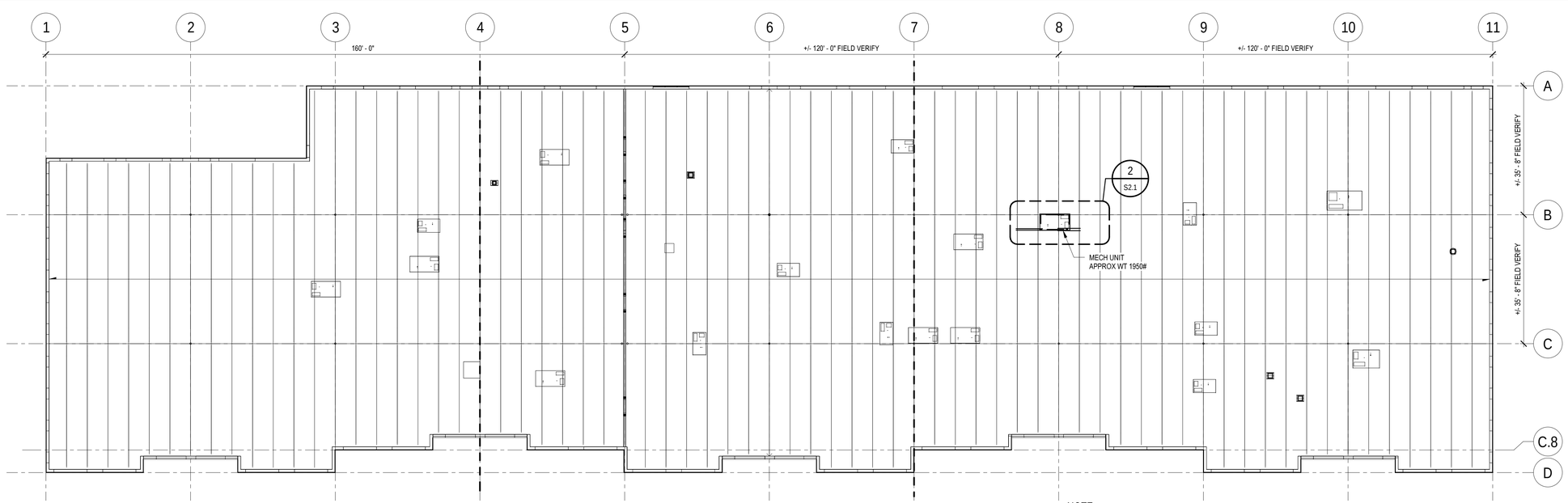

1 OVERALL ROOF FRAMING PLAN
SCALE: 1/16" = 1'-0"

NOTE:

1. REFER TO DWG S3.1 FOR "STRUCTURAL NOTES"
2. REFER TO DWG S1.1 FOR "MINIMUM COMPONENT & CLADDING NOMINAL DESIGN WIND PRESSURES"
3. CONTRACTOR TO FIELD VERIFY & COORDINATE ANY ADDITIONAL ROOF OPENING NOT SHOWN WITH DETAIL 3 & 4 ON DWG S2.1 AS REQUIRED.

LONG & ASSOCIATES
architects | engineers, inc.
4525 South Manhattan Avenue, Tampa, FL 33611-2305
T:813.839.0506 F:813.839.4616 AAC0010424 IB28 CGC1511025
www.longandassociates.com

THIS DOCUMENT IS COPYRIGHTED IN A LIMITED LEGAL SENSE BY LONG & ASSOCIATES. THE DOCUMENT IS THE PROPERTY OF LONG & ASSOCIATES FOR USE ON THE SPECIFIED PROJECT ONLY. ALL RIGHTS RESERVED.

HILLSBOROUGH COUNTY SHERIFF'S OFFICE

PINEBROOK BUILDING 4 INTERIOR RENOVATION

12220 - 12238 TECH BLVD.
TAMPA, FL 33619

Seal

PAUL E. WIECZOREK, P.E.
PE 52804

No.	Date	Issues & Revisions

TO THE BEST OF THE ARCHITECT'S AND/OR ENGINEER'S KNOWLEDGE THESE PLANS AND SPECIFICATIONS COMPLY WITH THE APPLICABLE MINIMUM BUILDING CODES AND THE APPLICABLE FIRE-SAFETY STANDARDS

Phase: 100% CONSTRUCTION DRAWINGS
Drawn By: L&A
Checked By: PW
Job No: 19002
Date: SEPTEMBER 20, 2019
9/20/2019 8:54:10 AM

OVERALL ROOF FRAMING PLAN

S2.1

STRUCTURAL NOTES

001 DESIGN CRITERIA

001.1 ALL WORK SHALL CONFORM TO THE STANDARDS OF THE 2017 FLORIDA BUILDING CODE, SIXTH EDITION.

001.2 DEAD LOADS:
ACTUAL WEIGHT OF MATERIAL USED

001.3 WIND LOADS PER AMERICAN SOCIETY OF CIVIL ENGINEERS ASCE 7-10 "MINIMUM DESIGN LOADS FOR BUILDINGS AND OTHER STRUCTURES."

001.4 THE PROPOSED STRUCTURE IS LOCATED WITHIN THE WIND-BORNE DEBRIS REGION.

001.5 BASIC WIND SPEED, (3 SECOND GUST) VULT = 149 MPH (ULTIMATE WIND SPEED)
Vasd = 116 MPH (EQUIVALENT NOMINAL WIND SPEED)

001.6 WIND DIRECTIONALITY FACTOR (Kd) = 0.85

001.7 BUILDING RISK CATEGORY = III

001.8 WIND EXPOSURE CATEGORY = EXPOSURE C, WITH NO SIGNIFICANT ESCARPMENTS.

001.9 BUILDING ENCLOSURE CLASSIFICATION = ENCLOSED BUILDING

001.10 INTERNAL PRESSURE COEFFICIENT (GCpi) = +/- 0.18

001.11 ALL EXTERIOR COMPONENT AND CLADDING SHALL BE DESIGNED TO RESIST THE WIND PRESSURES INDICATED IN THE WALL AND ROOF "MINIMUM COMPONENT AND CLADDING NOMINAL DESIGN WIND PRESSURES" TABLE 3 ON DRAWING S1.1. ROOF COMPONENTS SHALL ALSO COMPLY WITH THE APPROPRIATE FACTORY MUTUAL CLASSIFICATION CORRESPONDING WITH THESE PRESSURES.

001.12 SEISMIC ZONE: ZERO.

002 GENERAL

002.1 GENERAL NOTES AND TYPICAL DETAILS APPLY TO ALL STRUCTURAL FEATURES UNLESS OTHERWISE SHOWN OR NOTED. IF CERTAIN FEATURES ARE NOT FULLY SHOWN OR CALLED FOR ON THE DRAWINGS OR SPECIFICATIONS, THEIR CONSTRUCTION SHALL BE OF THE SAME CHARACTER AS FOR SIMILAR CONDITIONS.

002.2 ANCHORS ARE TO BE INSTALLED WITHIN A TOLERANCE OF 1/4" OF SPECIFIED LOCATION.

002.3 THIS STRUCTURE IS DESIGNED TO BE SELF-SUPPORTING AND STABLE AFTER THE BUILDING IS FULLY COMPLETED. IT IS THE CONTRACTOR'S RESPONSIBILITY TO DETERMINE ERECTION PROCEDURE AND SEQUENCE AND TO ENSURE THE SAFETY OF WORKERS, THE BUILDING AND ITS COMPONENT PARTS DURING ERECTION. THIS INCLUDES THE ADDITION OF WHATEVER SHORING, TEMPORARY BRACING, ETC. THAT MAY BE NECESSARY AS WELL AS FULL COMPLIANCE WITH ALL APPLICABLE OSHA REGULATIONS. OBSERVATION VISITS TO THE SITE BY LONG AND ASSOCIATES PERSONAL SHALL NOT INCLUDE INSPECTION FOR THESE ITEMS.

002.4 IT IS THE CONTRACTOR'S SOLE RESPONSIBILITY TO ENSURE ALL WORK IS PERFORMED IN ACCORDANCE WITH THE CONTRACT DOCUMENTS.

002.5 REFER TO ARCH DRAWINGS FOR LOCATIONS AND HEIGHTS OF ALL WALLS / WALL OPENINGS NOT SHOWN OR OTHERWISE NOTED ON THE STRUCTURAL DRAWINGS.

002.6 REFER TO ARCH AND MECHANICAL DRAWINGS FOR SIZE AND LOCATION OF ALL OPENINGS NOT SHOWN OR OTHERWISE NOTED ON THE STRUCTURAL DRAWINGS.

002.7 DIMENSIONS SHALL NOT BE SCALED.

002.8 CONTRACTOR SHALL VERIFY ALL FIELD CONDITIONS AND DIMENSIONS RELATIVE TO SAME. WHERE THERE ARE CONFLICTS BETWEEN ACTUAL FIELD CONDITIONS AND/OR DATA PRESENTED ON THESE DRAWINGS, SUCH CONDITIONS SHALL BE CALLED TO THE ATTENTION OF LONG & ASSOCIATES IMMEDIATELY AND NECESSARY ADJUSTMENTS MADE PER THEIR INSTRUCTIONS.

002.9 SPECIALTY ENGINEER REQUIREMENTS: THE FLORIDA BOARD OF PROFESSIONAL ENGINEERS IS ON RECORD STATING THE RESPONSIBILITIES OF PROFESSIONAL ENGINEERS, PURSUANT TO RULE 61G15-31. CERTAIN COMPONENTS OF THIS STRUCTURE REQUIRES THE WORK OF A SPECIALTY ENGINEER. ALL PROCEDURES STATED IN RULE 61G15-31 STATEMENT SHALL APPLY TO THIS PROJECT.

002.10 SPECIFICATIONS, CODES, AND STANDARDS NOTED IN THESE CONTRACT DOCUMENTS SHALL BE OF THE LATEST EDITION APPROVED BY THE APPROPRIATE REGULATORY AGENCIES.

002.11 SHOP DRAWINGS AND CALCULATIONS FOR ALL SPECIALTY ENGINEERED BUILDING ELEMENTS MUST BE SIGNED AND SEALED BY THE CURRENTLY REGISTERED, FLORIDA SPECIALTY ENGINEER RESPONSIBLE FOR THE DESIGN AT TIME OF SUBMISSION.

300 CONCRETE

300.1 CONCRETE TO BE IN ACCORDANCE WITH ACI 318-14/318R-14 "BUILDING CODE REQUIREMENTS FOR STRUCTURAL CONCRETE AND COMMENTARY."

300.2 ALL REINFORCEMENT SHALL BE SECURELY HELD IN PLACE WITH STANDARD ACCESSORIES WHILE PLACING CONCRETE. IF REQUIRED, ADDITIONAL BARS OR STIRRUPS SHALL BE PROVIDED BY CONTRACTOR TO FURNISH SUPPORT FOR ALL BARS.

300.3 CONCRETING SHOULD BE CARRIED ON AT SUCH A RATE THAT THE CONCRETE IS AT ALL TIMES PLASTIC.

300.4 CONCRETE SHALL BE NORMAL WEIGHT WITH A COMPRESSIVE STRENGTH AT 28 DAYS NO LESS THAN 3,000 PSI FOR FOUNDATION; 4,000 PSI FOR SLABS ON GRADE.

300.5 PARTIALLY HARDENED CONCRETE, CONTAMINATED CONCRETE, RE-TEMPERED CONCRETE, AND CONCRETE THAT HAS BEEN RE-MIXED AFTER IT HAS TAKEN ITS INITIAL SET ARE NOT TO BE USED IN NEW CONCRETE PLACEMENT.

300.6 ALL REINFORCING STEEL SHALL BE CLEAN AND FREE OF MUD, OIL, RUST, AND OTHER COATINGS THAT WOULD IMPAIR PROPER BOND TO CONCRETE. ALL REINFORCING STEEL SHALL HAVE A MINIMUM YIELD STRENGTH OF 60,000 PSI AND SHALL CONFORM TO ASTM A-615. WELDABLE REINFORCING STEEL SHALL CONFORM TO ASTM A706.

300.7 MINIMUM COVER FOR REINFORCEMENT SHALL BE AS FOLLOWS:

CONCRETE CAST AGAINST AND PERMANENTLY EXPOSED TO EARTH	3"
CONCRETE EXPOSED TO EARTH OR WEATHER:	
#5 BAR AND SMALLER	1 1/2"
#6 BARS AND LARGER	2"
CONCRETE NOT EXPOSED TO EARTH OR WEATHER:	
SLABS, WALLS, AND JOISTS	3/4"
BEAMS (TO STIRRUPS)	1 1/2"
COLUMNS AND PIERS (TO TIES)	1 1/2"

300.8 ALL WELDED WIRE REINFORCING SHALL CONFORM TO ASTM A1064, LAP SPLICE 6".

300.9 DETAIL ALL REINFORCEMENT IN ACCORDANCE WITH ACI 315.

300.10 SPLICES IN ALL REINFORCING SHALL BE CLASS B AS CALCULATED PER ACI 318 AND AS SHOWN ON THESE DWGS, WHICHEVER IS GREATER.

300.11 REBAR SHALL BE CONTINUOUS AROUND ALL CORNERS AND INTERSECTIONS OF WALLS, BEAMS, AND FOOTINGS. PROVIDE CORNER BARS AS REQUIRED.

300.12 REFER TO "STEGO WRAP VAPOR RETARDER" DETAIL 1/S3.1 FOR TYPICAL VAPOR RETARDER BOOTS AND PENETRATIONS AT SLAB ON GRADE BLOCKOUTS AND PIPE PENETRATIONS.

300.13 SLAB-ON-GRADE: TROWEL FINISH,
SPECIFIED OVERALL VALUE: FF 38 / FL 25
MINIMUM LOCAL VALUE: FF 25 / FL 20
AS EXPRESSED IN ACI 117, SECTION 4, AND MEASURED IN ACCORDANCE WITH ASTM E 1155

400 MASONRY

400.1 MASONRY DESIGN AND CONSTRUCTION SHALL CONFORM TO ACI 530-13/ASCE 5-13/TMS 402-16 "BUILDING CODE REQUIREMENTS FOR MASONRY STRUCTURES" WITH SPECIFICATIONS AND COMMENTARIES, ASTM C476, ASTM C1019 AND NCMA TEK 107. CMU GROUT SHALL MEET ASTM C476 AND HAVE A MINIMUM 28 DAY COMPRESSIVE STRENGTH OF 2500 PSI AT 28 DAYS.

400.2 HOLLOW REGULAR CONCRETE MASONRY UNITS SHALL CONFORM TO "STANDARD SPECIFICATIONS FOR HOLLOW LOAD-BEARING MASONRY UNITS" ASTM C-90, TYPE II, WITH A 28-DAY COMPRESSIVE STRENGTH NOT LESS THAN 1,900 PSI (NET SECTION AREA), f'm= 1,500 PSI. MORTAR SHALL BE TYPE S FOR ALL MASONRY IN ACCORDANCE WITH ASTM C270, PROPORTION SPECIFICATIONS.

400.3 VERTICAL REINFORCING BARS COMPLETE WITH STARTER BARS OF THE SAME DIAMETER SHALL BE PLACED AS INDICATED ON THE DRAWINGS.

400.4 HORIZONTAL MASONRY WALL TRUSS REINFORCEMENT SHALL CONFORM TO ASTM A-82, HOT DIP GALVANIZED (1.5 OZ/SQFT ZINC COATED) PER ASTM A153 CLASS B2 CONTINUOUS WELDED STEEL REINFORCEMENT STANDARD TRUSSED (9 GA SIDE RODS AND CROSS RODS) AS MANUFACTURED BY DURO-WAL (OR EQUIVALENT) SPACED 16" OC VERT MIN. LAP SPLICE, 12".

400.5 ALL HORIZONTAL MASONRY WALL TRUSS REINFORCEMENT ABOVE AND BELOW ALL OPENINGS SHALL RUN CONTINUOUS OR EXTEND TWO FEET BACK FROM APERTURE EDGE FOR THE FIRST AND SECOND BLOCK COURSES ABOVE AND BELOW APERTURE.

400.6 IN THE EVENT STEEL HAS BEEN INADVERTANTLY OMITTED FROM DOWN POUR LOCATIONS, DRILL 6" INTO CONCRETE (NO CLOSER THAN 3 3/4" FROM EDGES) AND USE HILTI HIT RE 500 V3 TWO PART EPOXY TO ANCHOR VERTICAL REINFORCEMENT IN PLACE.

400.7 GROUT PLACEMENT STOPPED FOR (1) HOUR OR MORE SHOULD BE STOPPED 1 1/2" BELOW THE TOP OF THE MASONRY UNIT TO PROVIDE A KEY FOR SUBSEQUENT GROUTING.

400.8 GROUT FOR FILLED CELLS SHALL BE PLACED IN CONFORMANCE WITH ACI 530.1 USING STANDARD Z-BAR POSITIONERS AT NO LESS THAN 48" O.C.

450 ANCHORS

450.1 EXPANSION ANCHORS IN UNCRACKED GROUT FILLED MASONRY UNITS SHALL HAVE BEEN QUALIFIED IN ACCORDANCE WITH ICC-ES AC01, AND SHALL BE SIMPSON CARBON STEEL WEDGE-ALL (ICC-ES ESR-1396) WITH A MINIMUM EMBEDMENT OF 3 1/2" FOR 1/2" DIA ANCHORS, 4 3/8" FOR 5/8" DIA ANCHORS AND 5 1/4" FOR 3/4" DIA ANCHORS. DISCONTINUE AND RELOCATE ANCHORS IF REINFORCING IS ENCOUNTERED WITHIN THE CURED GROUT FILLED MASONRY. AISI TYPE 304 STAINLESS STEEL ANCHORS ARE REQ'D AT ALL EXTERIOR EXPOSED CONDITIONS AND IF IN CONTACT W/ PRESSURE TREATED OR FIRE RETARDENT WOOD. ANCHORS EMBEDDED IN MASONRY UNITS MUST BE INSTALLED A MINIMUM OF 1 3/8" FROM ALL VERTICAL MORTAR JOINTS IN ACCORDANCE WITH MANUFACTURER'S RECOMMENDATIONS.

450.2 EXPANSION ANCHORS IN CRACKED OR UNCRACKED CONCRETE SHALL HAVE BEEN QUALIFIED IN ACCORDANCE WITH ACI 355.2 AND ICC-ES AC193, AND SHALL BE SIMPSON CARBON STEEL STRONG-BOLT 2 (ICC-ES ESR-3037) WITH A MINIMUM EMBEDMENT OF 3 1/2" FOR 1/2" DIA ANCHORS, 4" FOR 5/8" DIA ANCHORS AND 5 1/8" FOR 3/4" DIA ANCHORS. DISCONTINUE AND RELOCATE ANCHORS IF REINFORCING IS ENCOUNTERED WITHIN THE CURED CONCRETE. AISI TYPE 304 STAINLESS STEEL ANCHORS ARE REQUIRED AT ALL EXTERIOR CONDITIONS AND IF IN CONTACT W/ PRESSURE TREADED OR FIRE RETARDENT WOOD.

450.3A ADHESIVE ANCHORS IN UNCRACKED GROUT FILLED MASONRY UNITS SHALL HAVE BEEN QUALIFIED IN ACCORDANCE WITH ICC-ES AC58, AND SHALL BE SIMPSON SET-XP (IAPMO UES ER-265) OR SIMPSON AT-XP (IAPMO UES ER-281) WITH A MINIMUM EMBEDMENT OF 4 1/2" FOR 1/2" DIA, 5 5/8" FOR 5/8" DIA OR 6 1/2" FOR 3/4" DIA.

450.3B ADHESIVE ANCHOR IN UNREINFORCED MASONRY SHALL HAVE BEEN QUALIFIED IN ACCORDANCE WITH ICC-ES AC60, AND SHALL BE SIMPSON SET (ICC-ES ESR-1772) OR SIMPSON AT (ICC-ES ESR-1958) INSTALLED IN THE APPROPRIATE CONFIGURATION AS SHOWN ON THE CONTRACT DRAWINGS. THE APPROPRIATE SCREEN TUBE SHALL BE USED AS RECOMMENDED BY THE ADHESIVE MANUFACTURER.

450.4 LIMIT THREAD STICK-THRU PAST FACE OF NUTS ON EXPANSION BOLTS AND ADHESIVE ANCHORS TO 5/8".

500 STRUCTURAL STEEL

500.1 STRUCTURAL STEEL SHALL SHALL BE IN ACCORDANCE WITH AISC "STEEL CONSTRUCTION MANUAL", ALLOWABLE STRESS DESIGN, FOURTEENTH EDITION, AND SHALL CONFORM TO THE FOLLOWING MINIMUM SPECIFICATIONS:

ANGLES, CHANNELS, PLATES & BARS	ASTM A36
HSS	ASTM A500 GRADE B

500.2 ALL WELDING SHALL BE PERFORMED BY WELDERS WITH CURRENT CERTIFICATES, VALID FOR AT LEAST THE PAST YEAR, SUBMITTED TO L&A FOR VERIFICATION. ALL WELDING SHALL BE PERFORMED IN STRICT ACCORDANCE WITH AWS D1.1 "STRUCTURAL WELDING CODE -STEEL" (LATEST EDITION). MINIMUM SIZE OF ALL FILLET WELDS SHALL CONFORM TO AISC TABLE J2.4.

500.3 STEEL TUBES SHALL HAVE 1/4" CLOSURE PLATES AT ALL EXPOSED ENDS MIN UON.

500.4 WELDING GALVANIZED STEEL: WELD GALVANIZED STEEL IN STRICT ACCORDANCE WITH AMERICAN WELDING SOCIETY'S (AWS) RECOMMENDATION WZC, WELDING ZINC COATED STEEL. WELDS OF GALVANIZED STEEL SHALL BE ON AREAS THAT ARE FREE OF ZINC. REMOVE ZINC COATING AT LEAST ONE TO FOUR INCHES FROM EITHER SIDE OF THE INTENDED WELD ZONE AND BOTH SIDES OF THE PIECE BY GRINDING BACK THE ZINC COATING OR BURNING THE ZINC AWAY. WELDING GALVANIZED STEEL SHALL BE DONE IN WELL-VENTILATED LOCATIONS TO MINIMIZE FUME INHALATION, IN STRICT ACCORDANCE WITH AWS/ANSI Z49:1; SAFETY AND CUTTING IN WELDING. WELDING SHALL BE GAS METAL ARC (GMAW), SHIELDED METAL ARC WELDING (SMAW), MANUAL METAL ARC, OXACETYLENE WELDING, FRICTION WELDING, OR RESISTANCE WELDING AS APPLICABLE.

520 FLORIDA PRODUCT APPROVAL:

520.1 IN ACCORDANCE WITH THE FLORIDA PRODUCT APPROVAL SYSTEM, MANUFACTURERS OF WINDOWS, SKYLIGHTS, ROOF HATCHES, EXTERIOR DOORS, SHUTTERS, ROOFING AND ALL STRUCTURAL COMPONENTS THAT AFFECT THE STRUCTURAL INTEGRITY OF BUILDINGS DURING HURRICANES MUST SUBMIT THE FOLLOWING DOCUMENTATIONS TO THE OFFICES OF L&A FOR REVIEW AND APPROVAL:

1. EVIDENCE THAT THE PRODUCT HAS BEEN EVALUATED FOR COMPLIANCE WITH STANDARDS ESTABLISHED BY THE FLORIDA BUILDING CODE BY A FLORIDA BUILDING COMMISSION APPROVED ENTITY OR FLORIDA LICENSED P.E. OR R.A.

2. EVIDENCE THAT THE MANUFACTURER HAS CONTRACTED WITH A FLORIDA BUILDING COMMISSION APPROVED QUALITY ASSURANCE ENTITY TO MONITOR MANUFACTURING PRODUCTION AND HAS ACTIVELY COMPLIED OR HAVE THE PRODUCT LISTED AND LABELED BY A COMMISSION APPROVED CERTIFICATION PROGRAM.

3. INSTALLATION INSTRUCTIONS CONSISTENT WITH THE EVALUATION OF COMPLIANCE.

520.2 PRODUCTS INSTALLED OVER THE STRUCTURAL ROOF DECK SHALL BE TESTED AS AN ASSEMBLY, INCLUSIVE OF THE STRUCTURAL DECK BY AN APPROVED INDEPENDENT TESTING LABORATORY, IN ACCORDANCE WITH ANSI/AAMA/NWWDA 101/IS2 STANDARD AND BEAR AN AAMA OR WDMA LABEL IDENTIFYING THE MANUFACTURER, PERFORMANCE CHARACTERISTICS AND APPROVED PRODUCT TESTING ENTITY.

520.3 PRODUCTS INSTALLED OVER THE STRUCTURAL ROOF DECK SHALL BE ANCHORED PER PUBLISHED MANUFACTURER'S RECOMMENDATIONS IN ORDER TO SAFELY RESIST THE "MINIMUM COMPONENT AND CLADDING WIND PRESSURES" FOR THE ROOF FIELD, CORNERS AND EDGES, AS APPLICABLE, INDICATED ON THESE DRAWINGS. ANCHORAGE SHALL BE SUBSTANTIATED BY SIGNED, SEALED (EMBOSSED), AND DATED CALCULATIONS PERFORMED BY A STRUCTURAL ENGINEER CURRENTLY REGISTERED IN THE STATE OF FLORIDA. CALCULATIONS SHALL BE SUBMITTED TO THE A/E FOR REVIEW PRIOR TO FABRICATION OR ERECTION.

530 EXTERIOR APERATURES INCLUDING, BUT NOT LIMITED TO WINDOWS, DOORS, HOLLOW METAL FRAMES, AND LOUVERS:

530.1 EXTERIOR APERATURES INCLUDING, BUT NOT LIMITED TO WINDOWS, DOORS, HOLLOW METAL FRAMES, AND LOUVERS SHALL BE TESTED BY AN APPROVED INDEPENDENT TESTING LABORATORY, IN ACCORDANCE WITH ANSI/AAMA/NWWDA 101/IS2 STANDARD AND BEAR AN AAMA OR WDMA LABEL IDENTIFYING THE MANUFACTURER, PERFORMANCE CHARACTERISTICS AND APPROVED PRODUCT TESTING ENTITY.

530.2 EXTERIOR APERATURES INCLUDING, BUT NOT LIMITED TO WINDOWS, DOORS, HOLLOW METAL FRAMES, AND LOUVERS SHALL BE ANCHORED PER PUBLISHED MANUFACTURER'S RECOMMENDATIONS IN ORDER TO SAFELY RESIST THE "MINIMUM COMPONENT AND CLADDING WIND PRESSURES" FOR THE WALL FIELD, AND CORNERS, AS APPLICABLE, INDICATED ON THESE DRAWINGS. ANCHORAGE SHALL BE SUBSTANTIATED BY SIGNED, SEALED (EMBOSSED), AND DATED CALCULATIONS PERFORMED BY A STRUCTURAL ENGINEER CURRENTLY REGISTERED IN THE STATE OF FLORIDA. CALCULATIONS SHALL BE SUBMITTED TO THE A/E FOR REVIEW PRIOR TO FABRICATION OR ERECTION.

530.3 ALL WINDOW BUCKS SHALL EXTEND BEYOND THE INTERIOR LIP OF THE WINDOW. PROVIDE A MINIMUM GAP OF 1/16" AT ALL BUCKSTRIP JOINTS. FILLER PIECES OF BUCKSTRIP MUST BE AT LEAST 24" OR LONGER. CAULK ALL BUCKSTRIP JOINTS.

530.4 ALL MULLIONS AND ADJACIENT DOOR ASSEMBLIES SHALL BE TESTED OR ENGINEERED TO TRANSFER 1.5 TIMES THE COMPONENT DESIGN WIND LOADS TO THE ROUGH OPENING SUBSTRATE, WITH TESTING RESULTS PROVIDED TO THE A/E FOR REVIEW AND VERIFICATION.

530.5 EXTERIOR APERATURES INCLUDING, BUT NOT LIMITED TO WINDOWS, DOORS, HOLLOW METAL FRAMES, AND LOUVERS SHALL BE SUCCESSFULLY TESTED TO PROVIDE RESISTANCE TO PENETRATION BY FLYING MISSILES FOR THE LARGE FLYING MISSILES PER SSTD 12, ASTM E1886 AND ASTM E 1996 OR METROPOLITAN DADE COUNTY PROTOCOLS PA-201, PA-202, AND PA-203 AS APPLICABLE.

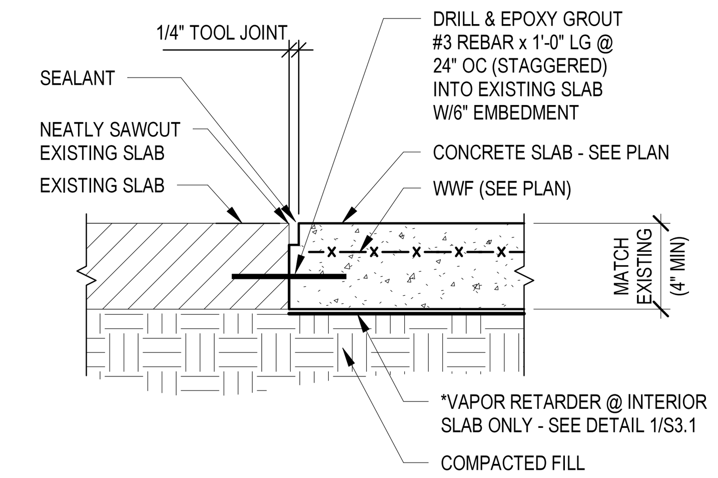

TYP CONCRETE SLAB INFILL PATCH

3 DETAIL
SCALE: NTS

LOCATION OF LAP SPLICE	BAR SIZE #5	BAR SIZE #6	BAR SIZE #7
8" MASONRY - FILLED CELLS & LINTELS	32"	57"	79"
ALL OTHER BARS IN 3000 PSI CONCRETE	36"	43"	63"
ALL OTHER BARS IN 4000 PSI CONCRETE	31"	37"	54"
TOP BARS IN 3000 PSI CONCRETE	47"	56"	81"
TOP BARS IN 4000 PSI CONCRETE	40"	48"	70"

LAP SPLICE SCHEDULE

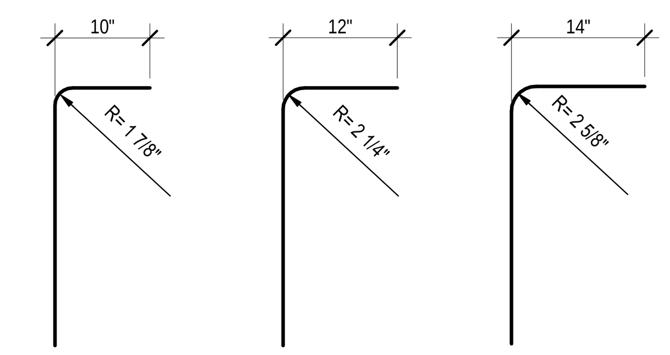

#5 STD HOOK #6 STD HOOK #7 STD HOOK

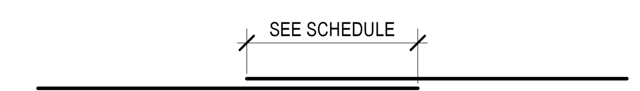

#5, #6 OR #7 LAP SPLICE

>>LAP SPLICE SCHEDULE NOTES:
LS1. WHEN LAPPING TWO DIFFERENT SIZE BARS, USE THE LAP DIMENSION OF THE SMALLER BAR.
LS2. TOP BARS ARE DEFINED AS HORIZ BARS WITH MORE THAN 12 INCHES OF CONC CAST BELOW THE BARS.
LS3. FABRICATOR SHALL REVISE LAP SPLICE LENGTHS PER ACI 318 IF CENTER TO CENTER SPACING OF BARS IS LESS THAN 2x BAR DIA FOR BEAMS OR 3x BAR DIA FOR ALL OTHER BARS.

GRADE 60 REINF HOOK & LAP SPLICES SCHEDULE

2 DETAIL
SCALE: NTS

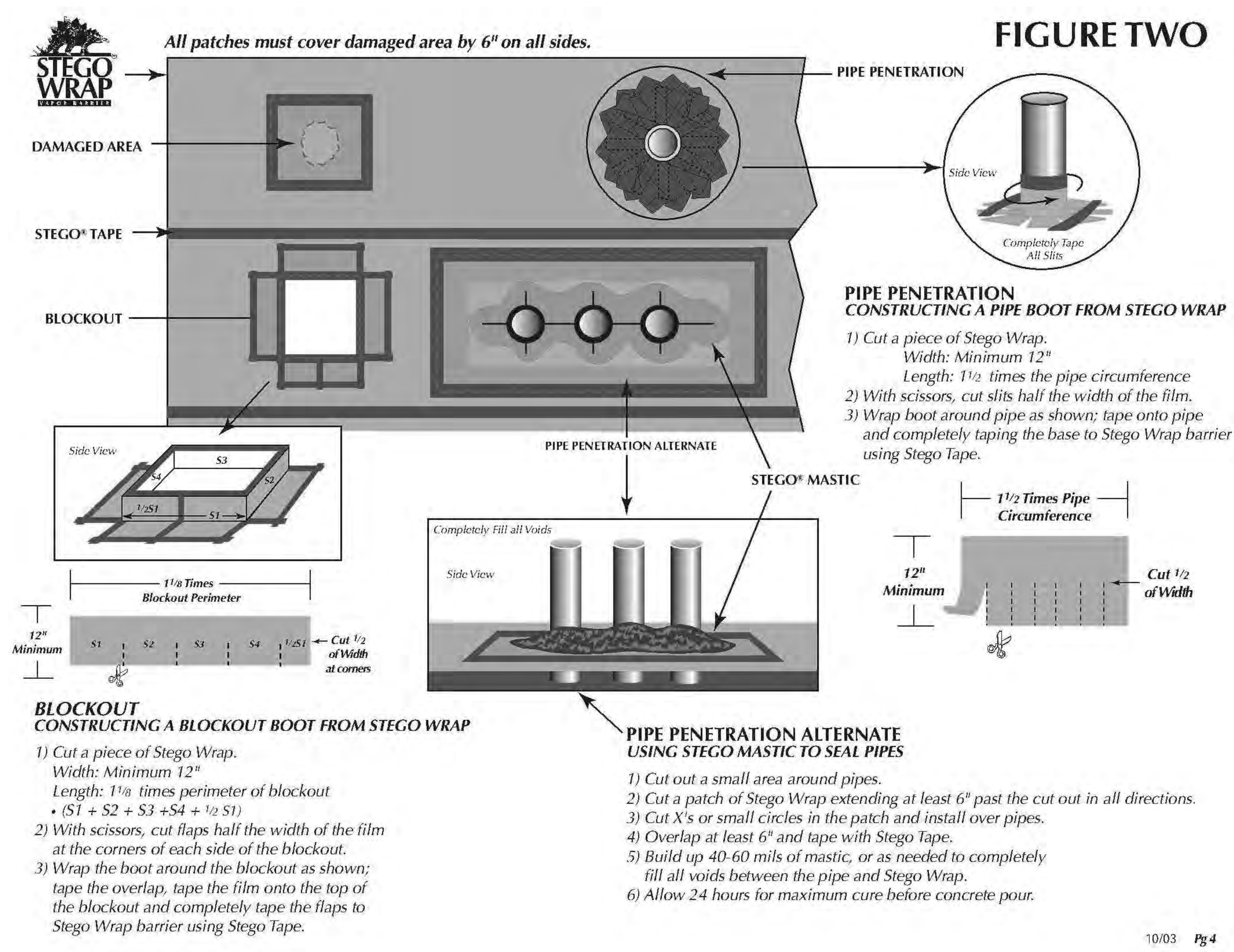

BASIS OF DESIGN - STEGO WRAP VAPOR RETARDER

NOTE:
1) VAPOR RETARDERS AT INTERIOR SLAB-ON-GRADE ONLY
2) CHEMICAL SOIL TREATMENT USED FOR TERMITE PROTECTION MUST HAVE A TERMITICIDE APPLIED IN THE SPACE BETWEEN METALLIC PIPING AND SLEEVE.
3) PROVIDE STEGO CRETE CLAW TAPE (CONT) AT ALL VAPOR RETARDER TERMINATIONS NOT TURNED UP AT STEM WALLS.

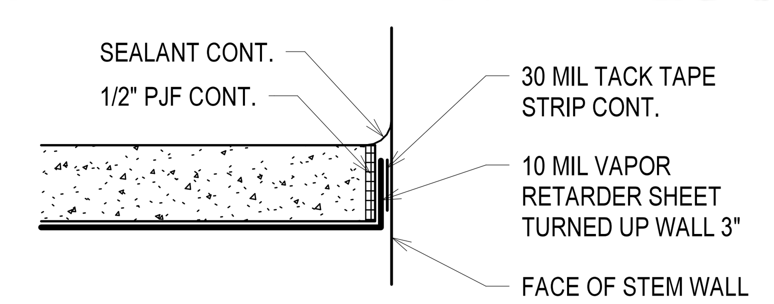

SLAB TERMINATION AT STEM WALL

1 DETAIL
SCALE: NTS

LONG & ASSOCIATES
architects | engineers, inc.
4525 South Manhattan Avenue, Tampa, FL 33611-2305
T:813.839.0506 F:813.839.4616 AAC001624 1828 CGC1511025
www.longandassociates.com

THIS DOCUMENT IS COPYRIGHT MATERIAL. ANY DISCLOSURE, UNAUTHORIZED USE, DISSEMINATION OR DUPLICATION WITHOUT THE EXPRESS WRITTEN CONSENT OF LONG & ASSOCIATES IS PROHIBITED ALL RIGHTS RESERVED

HILLSBOROUGH COUNTY SHERIFF'S OFFICE

PINEBROOK BUILDING 4 INTERIOR RENOVATION

1220 - 1238 TECH BLVD.
TAMPA, FL 33619

Seal

PAUL E. WIECZOREK, P.E.
PE 52804

No.	Date	Issues & Revisions

TO THE BEST OF THE ARCHITECT'S AND/OR ENGINEER'S KNOWLEDGE THESE PLANS AND SPECIFICATIONS COMPLY WITH THE APPLICABLE MINIMUM BUILDING CODES AND THE APPLICABLE FIRE-SAFETY STANDARDS

Phase:	100% CONSTRUCTION DRAWINGS
Drawn By:	L&A
Checked By:	PW
Job No:	19002
Date:	SEPTEMBER 20, 2019

9/20/2019 8:54:53 AM

STRUCTURAL NOTES & DETAILS

S3.1

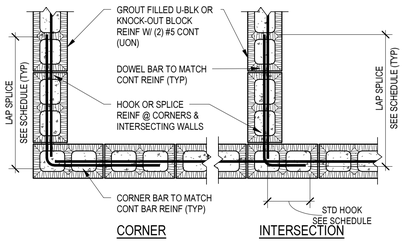

CONTINUITY OF MASONRY BOND BEAM REINF @ CORNERS & INTERSECTIONS

9 DETAIL (PLAN VIEW)
SCALE: 3/4" = 1'-0"

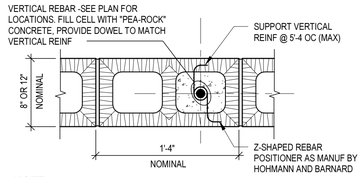

NOTE:
- REMOVE ALL PROTRUSIONS EXTENDING 1/2" OR MORE INTO CELLS OR CAVITIES TO BE GROUTED.
- SPACES TO BE GROUTED SHALL BE FREE OF MORTAR DROPPINGS, DEBRIS, LOOSE AGGREGATES, AND ANY MATERIAL DELETERIOUS TO MASONRY GROUT.
- SOLIDLY BED WEBS IN MORTAR WHERE ADJACENT TO REINFORCED CORES OR CELLS.

TYP VERT FILLED CELL MASONRY REINFORCEMENT (UON)

5 DETAIL (PLAN VIEW)
SCALE: NTS

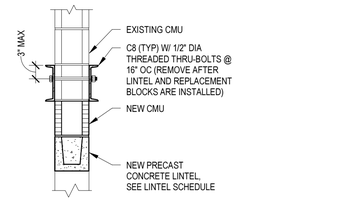

SECTION A-A

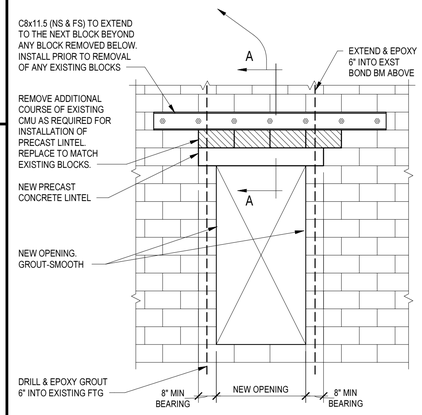

PRECAST LINTEL INSTALLATION @ EXISTING CMU WALL

2 DETAIL
SCALE: NTS

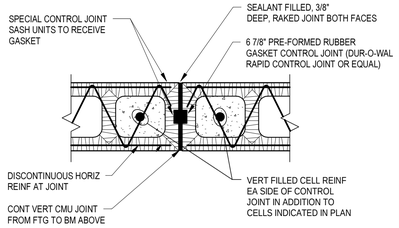

NOTE:
A. MAX SPACING OF EXTERIOR CONTROL JOINTS SHALL NOT EXCEED 26'-0" WITH BED JOINT REINFORCING SPACED 16" OC AND 32'-0" OC IF BED JOINT REINFORCING IS INCREASED TO 8" OC. MAX SPACING OF INTERIOR CONTROL JOINTS SHALL NOT EXCEED 32'-0"

B. PROVIDE 1/4" (MIN) 1/2" (MAX) SAW-CUT JOINT DEPTH IN EACH FACE SHELL OF MASONRY BOND BEAMS. REINF AND GROUT CORE IN MASONRY BOND BEAMS AS WELL AS REINF AND CONC BEAMS SHALL BE CONTINUOUS THROUGH MASONRY CONTROL JOINTS.

CONTROL JOINT @ MASONRY WALL

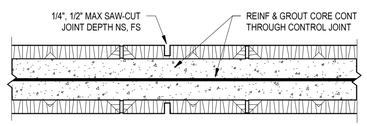

CONTROL JOINT @ MASONRY BOND BEAM

MASONRY CONTROL JOINT

11 DETAIL (PLAN VIEW)
SCALE: NTS

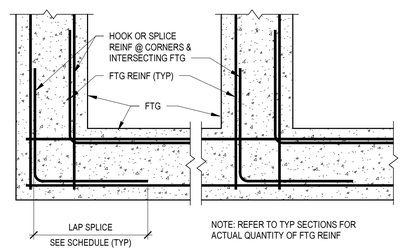

CONTINUITY OF FTG REINF @ CORNER & INTERSECTIONS

8 DETAIL (PLAN VIEW)
SCALE: 3/4" = 1'-0"

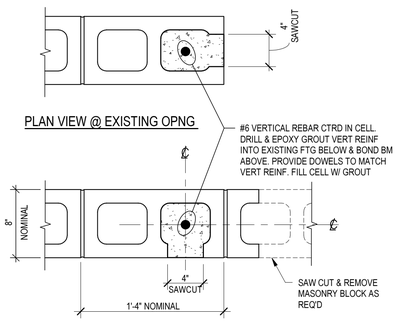

PLAN VIEW @ FACE OF CMU

NOTE:
- REMOVE ALL PROTRUSIONS EXTENDING 1/2" OR MORE INTO CELLS OR CAVITIES TO BE GROUTED.
- SPACES TO BE GROUTED SHALL BE FREE OF MORTAR DROPPINGS, DEBRIS, LOOSE AGGREGATES, AND ANY MATERIAL DELETERIOUS TO MASONRY GROUT.
- SOLIDLY BED WEBS IN MORTAR WHERE ADJACENT TO REINFORCED CORES OR CELLS.

TYP RETROFIT FILLED CELL MASONRY REINFORCEMENT

4 DETAIL (PLAN VIEW)
SCALE: NTS

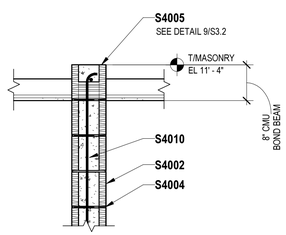

7 SECTION
SCALE: 3/4" = 1'-0"

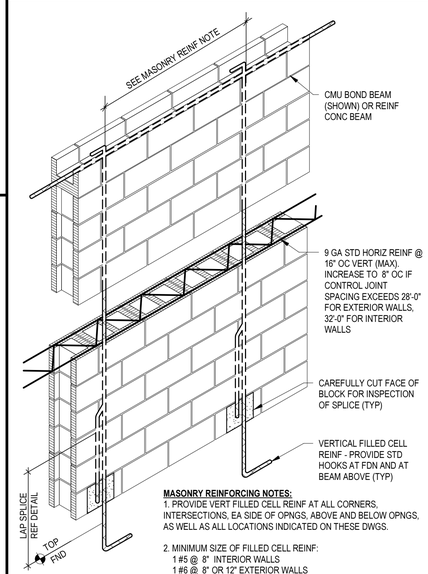

MASONRY REINFORCING NOTES:
1. PROVIDE VERT FILLED CELL REINF AT ALL CORNERS, INTERSECTIONS, EA SIDE OF OPNGS, ABOVE AND BELOW OPNGS, AS WELL AS ALL LOCATIONS INDICATED ON THESE DWGS.

2. MINIMUM SIZE OF FILLED CELL REINF:
1 #5 @ 8" INTERIOR WALLS
1 #6 @ 8" OR 12" EXTERIOR WALLS

3. MAXIMUM SPACING OF FILLED CELL REINF:
8'-0" @ 8" INTERIOR, NON LOAD BRG WALLS
4'-0" @ 8" INTERIOR, LOAD BRG WALLS
4'-0" @ 8" EXTERIOR WALLS

4. SEE DETAIL 11/S3.2 FOR "MASONRY CONTROL JOINT" INFORMATION. COORDINATE LOCATIONS OF CONTROL JOINTS W/ ARCH & THESE DWGS

TYPICAL MASONRY WALL REINF W/ BOND BEAMS

1 ISOMETRIC
SCALE: NTS

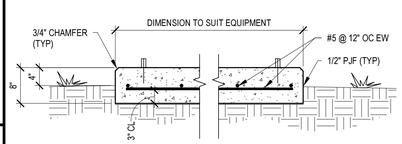

ISOLATED EXTERIOR EQUIP PAD (UON)

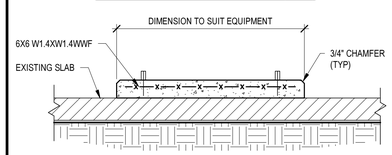

EQUIP PAD OVER EXISTING SLAB-ON-GRADE

NOTE:
CONTRACTOR TO DETERMINE SIZE OF PAD, ANCHORAGE, ETC FROM APPROVED VENDOR PRINTS

TYP EQUIPMENT PADS

10 SECTION
SCALE: NTS

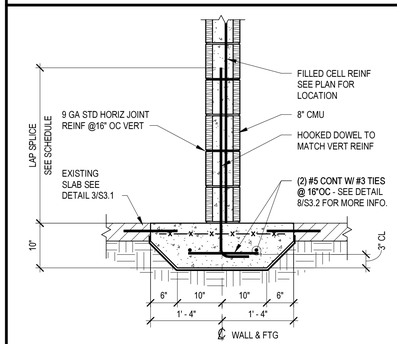

TYP INTERIOR MASONRY WALL THICKENED SLAB FTG

6 SECTION
SCALE: 3/4" = 1'-0"

MASONRY LINTEL SCHEDULE

CLEAR SPAN	TYPE	DETAIL	CAPACITY (PLF)
7'-4" - 10'-0"	8" PRE-CAST	C	1,666
6'-8"	8" PRE-CAST	C	2,798
6'-0"	8" PRE-CAST	B	1,200
5'-4"	8" PRE-CAST	B	1,398
4'-8"	8" PRE-CAST	B	1,663
4'-0"	8" PRE-CAST	B	2,081

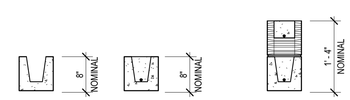

UNFILLED LINTEL "A"
GROUT FILLED LINTEL W/ (1) #5 AT BOTT "B"
GROUT FILLED LINTEL W/ (1) #5 AT BOTT & KNOCK-OUT BLK ABOVE W/ (1) #5 AT TOP "C"

PRE-CAST LINTEL DETAILS

>>LINTEL SCHEDULE NOTES:
LS1. PROVIDE FULL MORTAR HEAD AND BED JOINTS.
LS2. PROVIDE 8" MIN BEARING AT EA END OF LINTELS.
LS3. LOCATE FIELD ADDED REINFORCING BARS AT THE BOTTOM OF LINTEL CAVITY OR TOP OF FIELD PLACED CMU AS APPLICABLE.
LS4. INTERIOR, NON LOAD BRG, LINTELS OVER OPNGS W/ CLEAR SPANS 4'-0" OR LESS MAY BE UNFILLED. ALL OTHER LINTELS SHALL BE FILLED W/ 3,000 PSI 28-DAY COMPRESSION STRENGTH GROUT AND REINF W/ (1) #5 CONT. MIN.
LS5. CLEAR SPANS EXCEEDING 8'-8" NOT OTHERWISE NOTED SHALL HAVE A FORMED CONC LINTEL 24" DEEP x WALL WIDTH REINF W/ (2) #6 T&B, (2) #5 MID & #3 TIES @ 10" OC.
LS6. LINTELS SHALL MEET OR EXCEED THE CAPACITIES LISTED FOR GRAVITY LOADS WHILE LIMITING TOTAL DEFLECTION TO L/360.
LS7. THESE LOADS BASED FROM CAST-CRETE SAFE LOAD TABLES DATED 2012. ALTERNATE LINELS, IF USED, MUST MEET OR EXCEED THESE VALUES IN ALL RESPECTS.

3 DETAIL
SCALE: NTS

LONG & ASSOCIATES
architects | engineers, inc.
4525 South Manhattan Avenue, Tampa, FL 33611-2305
T:813.839.0506 F:813.839.4616 AA C001624 IB28 CGC1511025
www.longandassociates.com

THIS DOCUMENT IS COPYRIGHTED IN A LIMITED LICENSE. NO REPRODUCTIONS OR DISTRIBUTION WITHOUT WRITTEN CONSENT OF LONG & ASSOCIATES. ALL RIGHTS RESERVED.

HILLSBOROUGH COUNTY SHERIFF'S OFFICE

PINEBROOK BUILDING 4 INTERIOR RENOVATION

1220 - 1238 TECH BLVD.
TAMPA, FL 33619

Seal

PAUL E. WIECZOREK, P.E.
PE 52804

No.	Date	Issues & Revisions

TO THE BEST OF THE ARCHITECT'S AND/OR ENGINEER'S KNOWLEDGE THESE PLANS AND SPECIFICATIONS COMPLY WITH THE APPLICABLE MINIMUM BUILDING CODES AND THE APPLICABLE FIRE-SAFETY STANDARDS

Phase: 100% CONSTRUCTION DRAWINGS
Drawn By: L&A
Checked By: PW
Job No: 19002
Date: SEPTEMBER 20, 2019
9/20/2019 8:55:35 AM

SECTION & DETAILS

S3.2

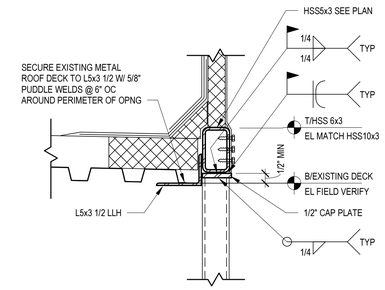

NOTE:
REFER TO DETAIL 2 ON THIS DWG FOR INFORMATION NOT SHOWN

4 DETAIL
SCALE: 1 1/2" = 1'-0"

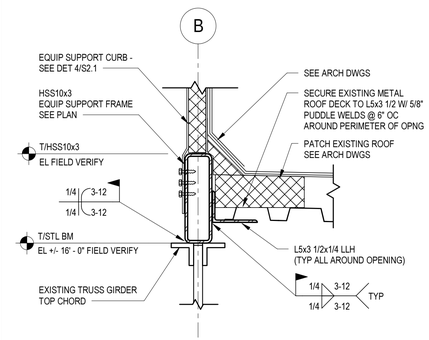

3 DETAIL
SCALE: 1 1/2" = 1'-0"

KEYNOTE LEGEND

NO.	DESCRIPTION

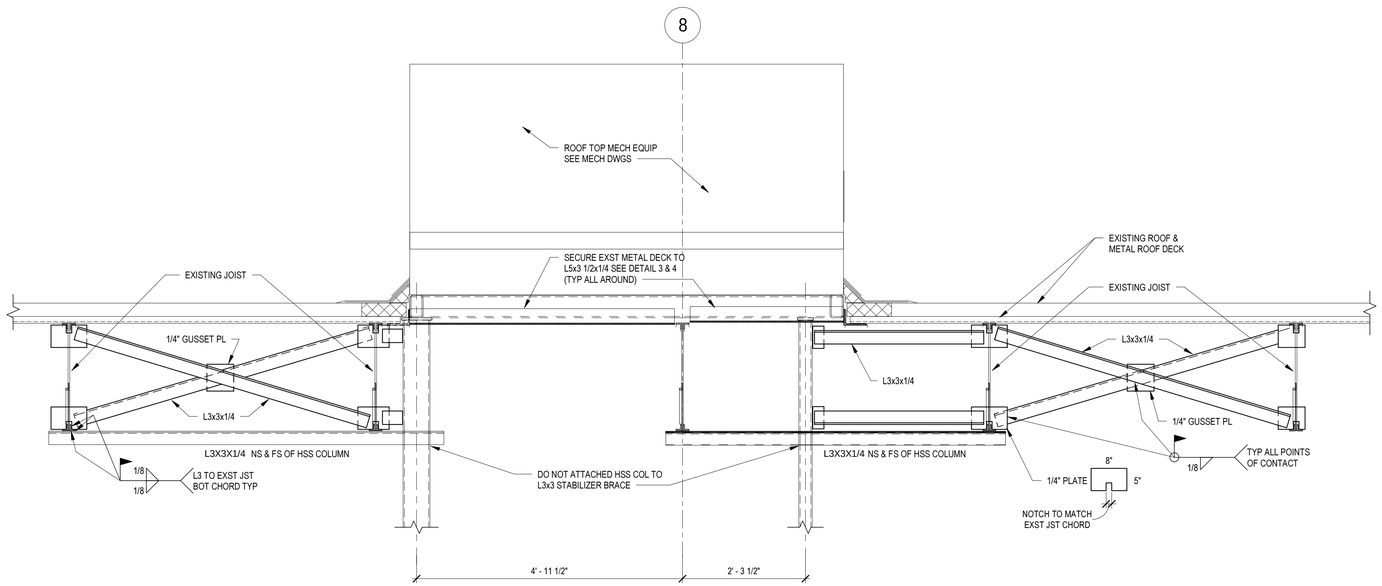

NOTE:
REFER TO DETAILS 3 & 4 ON THIS DWG
FOR INFO NOT SHOWN

2 SECTION
SCALE: 3/4" = 1'-0"

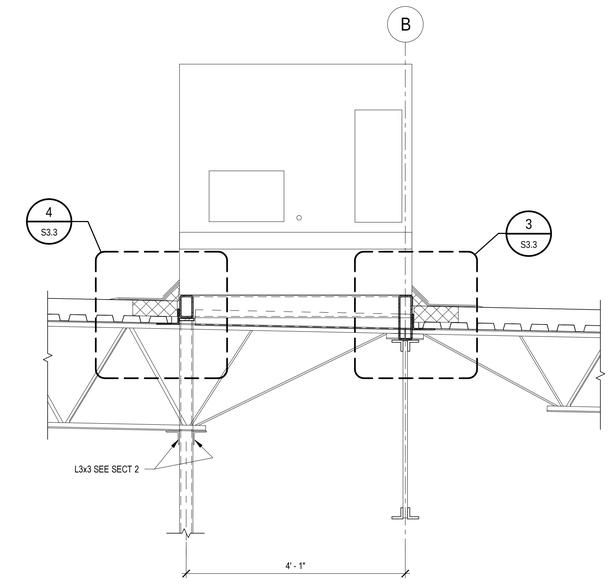

NOTE:
REFER TO SECTION 2 ON THIS DWG
FOR INFO NOT SHOWN

1 SECTION
SCALE: 3/4" = 1'-0"

LONG & ASSOCIATES
architects | engineers, inc.
4525 South Manhattan Avenue, Tampa, FL 33611-2305
T:813.839.0506 F:813.839.4616 AAC001624 IBR CGC1511025
www.longandassociates.com

THIS DOCUMENT IS COPYRIGHTED IN A LIMITED FORM. THE PROPERTY OF LONG & ASSOCIATES. REPRODUCTION OR REPRODUCTION WITHOUT WRITTEN CONSENT OF LONG & ASSOCIATES IS PROHIBITED. ALL RIGHTS RESERVED.

HILLSBOROUGH COUNTY SHERIFF'S OFFICE

PINEBROOK BUILDING 4 INTERIOR RENOVATION

1220 - 1238 TECH BLVD.
TAMPA, FL 33619

Seal

PAUL E. WIECZOREK, P.E.
PE 52804

No.	Date	Issues & Revisions

TO THE BEST OF THE ARCHITECT'S AND/OR ENGINEER'S KNOWLEDGE THESE PLANS AND SPECIFICATIONS COMPLY WITH THE APPLICABLE MINIMUM BUILDING CODES AND THE APPLICABLE FIRE-SAFETY STANDARDS

Phase: 100% CONSTRUCTION DRAWINGS
Drawn By: L&A
Checked By: PW
Job No: 19002
Date: SEPTEMBER 20, 2019
9/20/2019 8:56:18 AM

SECTIONS & DETAILS

S3.3

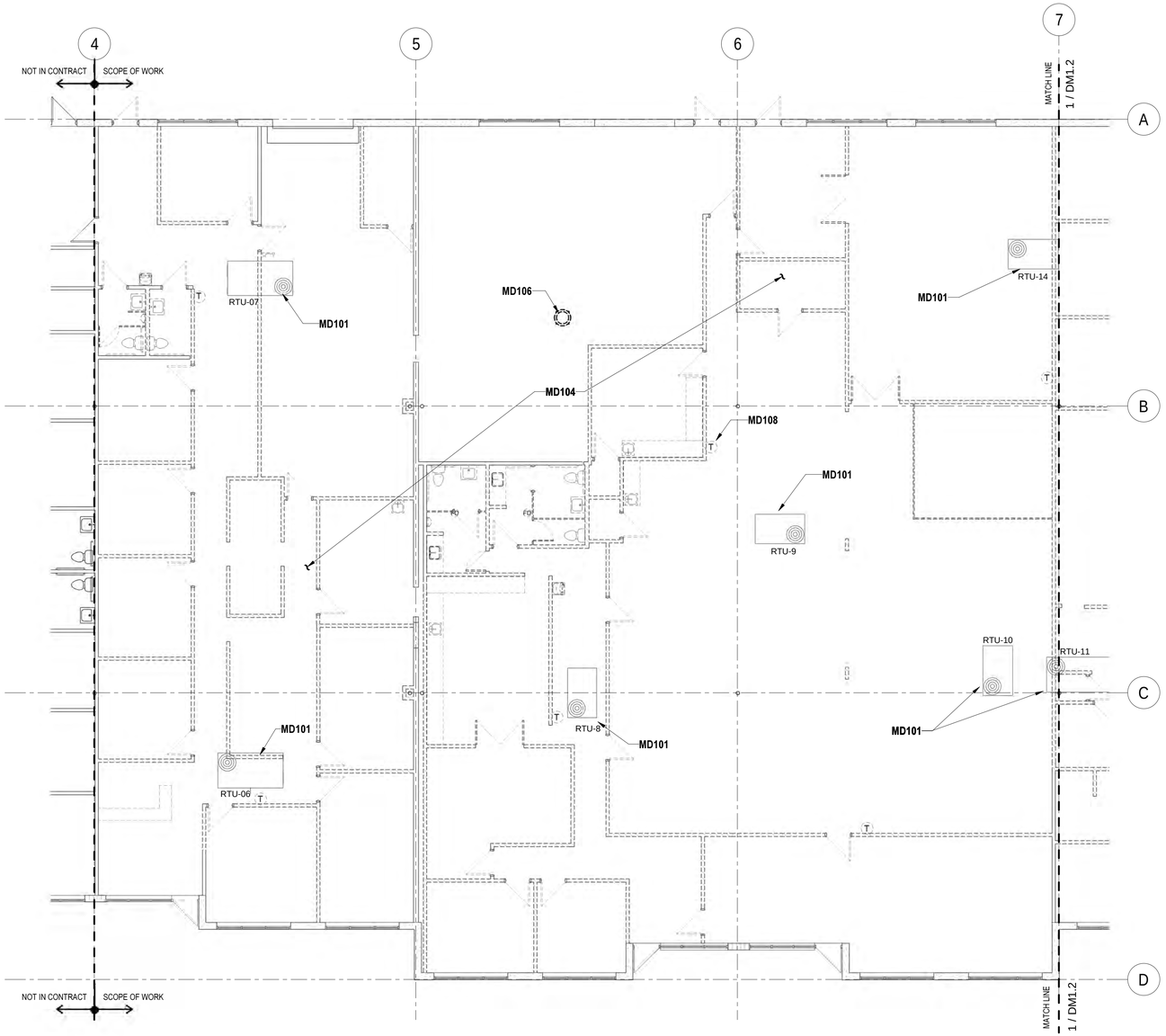

N 1 PARTIAL MECH DEMOLITION PLAN

SCALE: 1/8" = 1'-0"

0' 4' 8' 16'

KEYNOTE LEGEND

NO.	DESCRIPTION
MD101	EXISTING ROOFTOP UNIT TO REMAIN.
MD104	REMOVE ALL DUCTWORK, HANGERS, SUPPORTS, AIR DEVICES, SMOKE DETECTORS, THERMOSTATS, AND CONTROL WIRING IN SCOPE OF WORK AREA.
MD106	EXHAUST FAN TO BE REMOVED. PREPARE CURB FOR INSTALLATION OF NEW GRAVITY RELIEF HOOD.
MD108	DEMOLISH THERMOSTAT. (TYP)

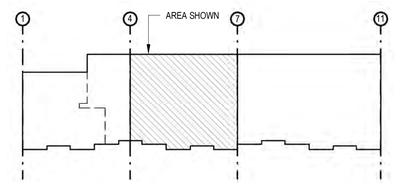

A KEY PLAN

SCALE: NTS

LONG & ASSOCIATES
architects | engineers, inc.
4525 South Manhattan Avenue, Tampa, FL 33611-2305
T:813.839.0506 F:813.839.4616 AAC0001624 IB28 CGC1511025
www.longandassociates.com

THIS DOCUMENT IS COPYRIGHTED IN A NOTE TO CLIENT, AND REMAINS THE PROPERTY OF LONG & ASSOCIATES. REPRODUCTION OR REUSE WITHOUT WRITTEN CONSENT OF LONG & ASSOCIATES IS PROHIBITED. ALL RIGHTS RESERVED.

HILLSBOROUGH COUNTY SHERIFF'S OFFICE

PINEBROOK BUILDING 4 INTERIOR RENOVATION

1220 - 1238 TECH BLVD.
TAMPA, FL 33619

Seal

WILLIAM E. BROWN, P.E.
PE 57975

No.	Date	Issues & Revisions

TO THE BEST OF THE ARCHITECT'S AND/OR ENGINEER'S KNOWLEDGE THESE PLANS AND SPECIFICATIONS COMPLY WITH THE APPLICABLE MINIMUM BUILDING CODES AND THE APPLICABLE FIRE-SAFETY STANDARDS

Phase: 100% CONSTRUCTION DRAWINGS
Drawn By: CB
Checked By: BB
Job No: 19002
Date: SEPTEMBER 20, 2019
9/19/2019 4:43:45 PM

PARTIAL MECH DEMOLITION PLAN

DM1.1

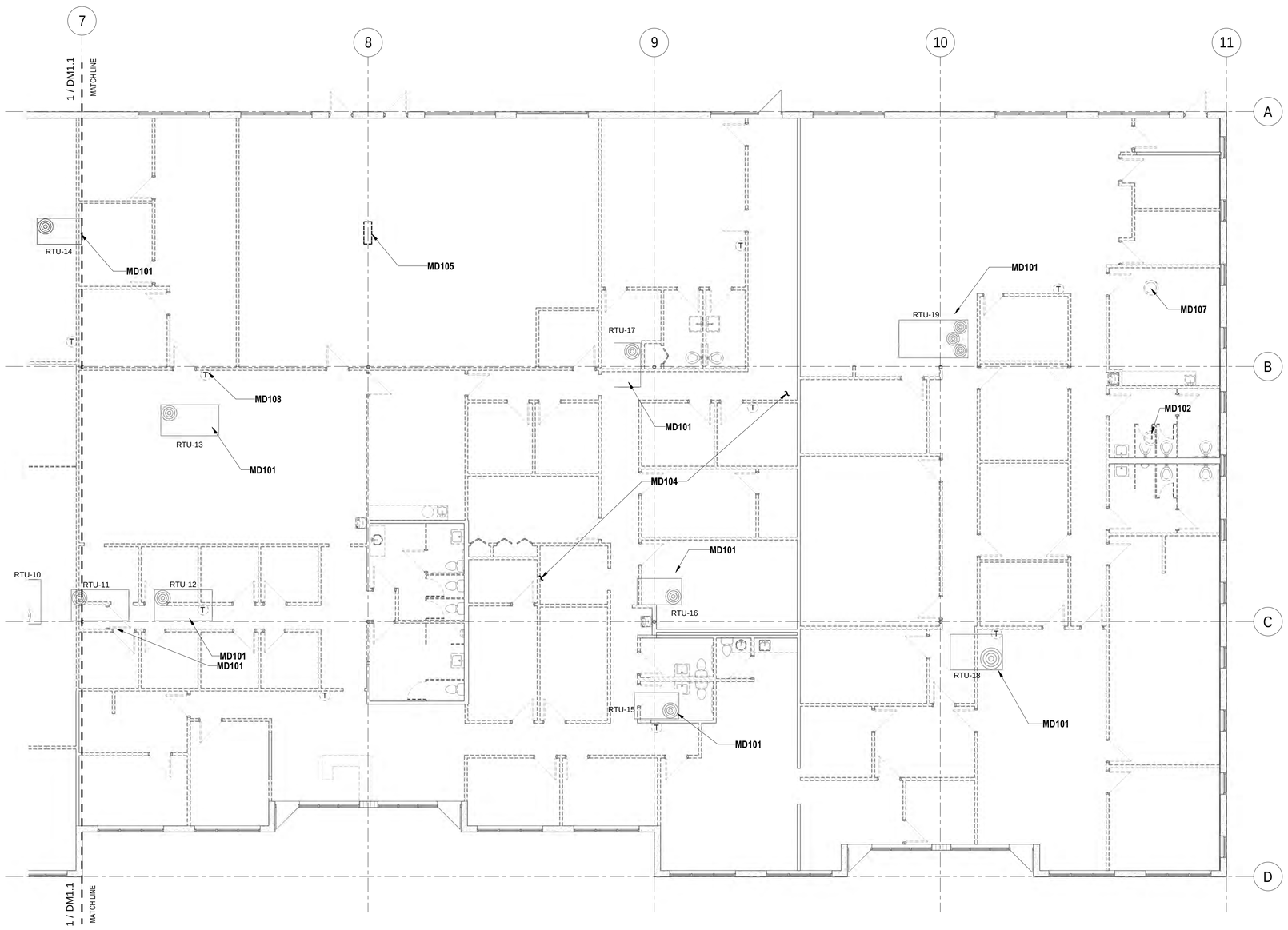

N 1 PARTIAL MECH DEMOLITION PLAN
SCALE: 1/8" = 1'-0"
0' 4' 8' 16'

KEYNOTE LEGEND

NO.	DESCRIPTION
MD101	EXISTING ROOFTOP UNIT TO REMAIN.
MD102	DEMOLISH EXISTING ROOFTOP EXHAUST FAN. REPLACE WITH NEW ROOFTOP EXHAUST FAN. SEE SCHEDULE AND DETAIL SHEET FOR DETAILS. (TYP) CONTRACTOR TO FIELD VERIFY ALL EXISTING VOLTAGES PRIOR TO ORDERING FANS. CONTRACTOR TO FIELD VERIFY CURB REQUIREMENTS. ANY AND ALL ROOF WORK THAT OCCURS SHALL MAINTAIN EXISTING ROOF WARRANTY. CONTACT OWNER FOR COPY OF EXISTING WARRANTY.
MD104	REMOVE ALL DUCTWORK, HANGERS, SUPPORTS, AIR DEVICES, SMOKE DETECTORS, THERMOSTATS, AND CONTROL WIRING IN SCOPE OF WORK AREA.
MD105	REMOVE EXISTING MINI-SPLIT
MD107	REMOVE EXHAUST FAN AND CAP CURB. SEAL AIR AND WATER TIGHT. SEE DETAIL SHEET.
MD108	DEMOLISH THERMOSTAT. (TYP)

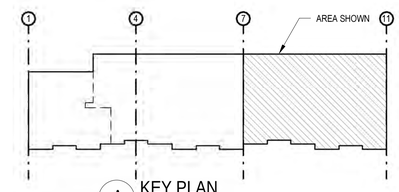

A KEY PLAN
SCALE: NTS

LONG & ASSOCIATES
architects | engineers, inc.
4525 South Manhattan Avenue, Tampa, FL 33611-2305
T:813.839.0506 F:813.839.4616 AAC0001624 IBDR CGC1511025
www.longandassociates.com

THIS DOCUMENT IS COPYRIGHTED IN A LIMITED LICENSE HAS PERMITTED TO ESTIMATION, VERIFICATION, REVIEW OR EXPERT WITNESS PURPOSES ONLY. ALL OTHER USE BY OTHERS IS PROHIBITED WITHOUT THE EXPRESS WRITTEN CONSENT OF LONG & ASSOCIATES. ALL RIGHTS RESERVED.

HILLSBOROUGH COUNTY SHERIFF'S OFFICE

PINEBROOK BUILDING 4 INTERIOR RENOVATION

1220 - 1238 TECH BLVD.
TAMPA, FL 33619

Seal

WILLIAM E. BROWN, P.E.
PE 57975

No.	Date	Issues & Revisions

TO THE BEST OF THE ARCHITECT'S AND/OR ENGINEER'S KNOWLEDGE THESE PLANS AND SPECIFICATIONS COMPLY WITH THE APPLICABLE MINIMUM BUILDING CODES AND THE APPLICABLE FIRE-SAFETY STANDARDS

Phase: 100% CONSTRUCTION DRAWINGS
Drawn By: CB
Checked By: BB
Job No: 19002
Date: SEPTEMBER 20, 2019
9/19/2019 4:43:54 PM

PARTIAL MECH DEMOLITION RIGHT

DM1.2

LEGEND

	AUTOMATIC FLOW CONTROL VALVE	BTUH	BRITISH THERMAL UNITS PER HOUR
CHWR	CHILLED WATER RETURN	CD	CEILING DIFFUSER
CHWS	CHILLED WATER SUPPLY	CENT	CENTRIFUGAL
	DOMESTIC COLD WATER	CFM	CUBIC FEET PER MINUTE
RS	REFRIGERANT SUCTION	COMPR	COMPRESSOR
RL	REFRIGERANT LIQUID	CLG	CEILING
RH	REFRIGERANT HOT GAS	CO	CLEANOUT
	GATE VALVE	CU	CONDENSING UNIT
	CHECK VALVE	DB	DRY BULB
	RELIEF VALVE	DL	DOOR LOUVER
	UNION (DIELECTRIC IF REQUIRED)	DN	DOWN
TS	TEMPERATURE SENSOR WELL	DP	DIFFERENTIAL PRESSURE
		DX	DIRECT EXPANSION
TW	THERMO WELL	EA	EACH
FM	FLOW METER	EF	EXHAUST FAN
		EFF	EFFICIENCY
	THERMOMETER IN SEPARABLE WELL	EL	ELEVATION
	PRESSURE GAUGE WITH NEEDLE VALVE	EMCS	ENERGY MGMT & CONTROL SYSTEM
AAV	AUTOMATIC AIR VENT	EQPT	EQUIPMENT
		EXT	EXTERNAL
	VENTURI FLOWMETER	^{O}F	DEGREES FAHRENHEIT
PS	PRESSURE SENSOR TAP	FC	FORWARD CURVE
M	MOTORIZED CONTROL VALVE, 2-WAY	F/C	FLEX CONNECTION
M	MOTORIZED CONTROL VALVE, 3-WAY	FL DR	FLOOR DRAIN
		FT	FEET
	BUTTERFLY VALVE	FPM	FEET PER MINUTE
	BALL VALVE	GPM	GALLONS PER MINUTE
	STRAINER	GR	GRILLE
	GLOBE VALVE	HB	HOSE BIBB
	PUMP	HP	HORSEPOWER
M	MOTORIZED DAMPER, OPPOSED BLADE	HZ	CYCLE
VD	MANUAL VOLUME DAMPER	IN	INCHES
M	MOTORIZED DAMPER, PARALLEL BLADE	KW	KILOWATTS
	HOSE END DRAIN VALVE	MAX	MAXIMUM
	FLEX DUCT	MBH	1,000 BRITISH THERMAL UNITS PER HOUR
	90 ELBOW WITH TURNING VANES	MFG	MANUFACTURER
		MD	MOTORIZED DAMPER
	SUPPLY AIR DIFFUSER OR GRILLE	MCB	MAIN CIRCUIT BREAKER
	RETURN/EXH AIR REGISTER OR GRILLE	MIN	MINIMUM
		NC	NOISE CRITERIA
	EXHAUST	NK	NECK
	SUPPLY DUCT SECTION	NTS	NOT TO SCALE
	RETURN/EXH AIR DUCT SECTION	OA	OUTSIDE AIR
		OBD	OPPOSED BLADE DAMPER
	DIRECTION OF BLOW 1-WAY, 2-WAY, 3-WAY OR 4-WAY	Δ P	DIFFERENCE IN PRESSURE
	FLEX DUCT CONNECTOR	PL	PLACES
FD	FIRE DAMPER - VERTICAL	PRV	POWER ROOF VENT
FD	FIRE DAMPER - HORIZONTAL	PSI	POUND PER SQUARE INCH (GAUGE)
SD	SMOKE DAMPER - VERTICAL	RA	RETURN AIR
DP	DIFFERENTIAL PRESSURE	REG	REGISTER
CSR	CURRENT SENSING RELAY	RM	ROOM
S	SWITCH (KEYED) - NIGHT OVERRIDE	RPM	REVOLUTIONS PER MINUTE
S	SWITCH - TIMER	SA	SUPPLY AIR
S	SMOKE DETECTOR	SD	SMOKE DETECTOR
H	HUMIDISTAT	SP	STATIC PRESSURE
T	THERMOSTAT	SS	STAINLESS STEEL
	TEMPERATURE SENSOR, AVERAGING TYPE	SW	SWITCH
	TEMPERATURE SENSOR, IMMERSION TYPE	TEMP	TEMPERATURE
	HUMIDITY SENSOR, DUCT MOUNTED	TYP	TYPICAL
	CO2 SENSOR, DUCT MOUNTED	UC	UNDERCUT DOOR
	VIBRATION SWITCH	UON	UNLESS OTHERWISE NOTED
	ROUND, DIAMETER	V	VOLTS
	FLAT OVAL	VAV	VARIABLE AIR VOLUME
	PHASE	VD	VOLUME DAMPER (MANUAL)
	DOOR LOUVER (12x12 UON)	VTR	VENT THRU ROOF
UC	UNDERCUT DOOR (1" UON)	WB	WET BULB
AD-X	ACCESS DOOR (DUCT AND EQUIPMENT)	WG	WATER GAUGE
AD	AIR DEVICE NO "X"	XFR	TRANSFER
AFF	ABOVE FINISHED FLOOR	BDD	BACKDRAFT DAMPER
ATC	AUTOMATIC TEMPERATURE CONTROL	BOD	BOTTOM OF DUCT

HVAC GENERAL NOTES:

A. ALL HVAC WORK SHALL BE IN ACCORDANCE WITH ALL APPLICABLE CODES AND NFPA REGULATIONS.

B. DUCTWORK SHALL BE FABRICATED STEEL. CONSTRUCT AND INSTALL PER ASHRAE AND SMACNA STANDARDS AND RECOMMENDATIONS.

C. BEFORE FABRICATION, VERIFY AND COORDINATE ALL DIMENSIONS IN FIELD. SEE SMACNA STDS FOR WEIGHT, BRACING, REQUIREMENTS, ETC. OF DUCTWORK.

D. FURNISH BUILDING ACCESS PANELS FOR ACCESS TO DEFLECTING DEVICES IN DUCTS, FIRE DAMPERS, CONTROLS, ETC.

E. DUCT SIZES AND OPENINGS THRU ROOFS, SLABS AND WALL PARTITIONS SHALL SUIT EQPT FURNISHED.

F. COORDINATE DIFFUSER AND REGISTER LOCATIONS WITH BUILDING STRUCTURE, LIGHTING LAYOUT AND CEILING PLAN.

G. DUCTWORK LOCATIONS AND CLEARANCES SHALL BE COORDINATED WITH ALL OTHER TRADES.

H. PREPARE SHOP AND COORDINATION DRAWINGS AS REQUIRED

I. LOCATE THERMOSTATS 54" ABOVE FINISHED FLOOR, UNLESS NOTED OTHERWISE, IN ACCORDANCE WITH ADA.

J. ALL EQUIPMENT, DUCTWORK, ETC. SHALL BE SUPPORTED AS REQUIRED.

K. PROVIDE ADDITIONAL SUPPORTS AS REQUIRED TO PROVIDE VIBRATION-FREE, RIGID INSTALLATION.

L. ALL DUCT SIZES SHOWN ARE CLEAR INSIDE (SHEET METAL) DIMENSIONS.

M. INSIDES OF DUCTS VISIBLE THROUGH GRILLES, REGISTERS OR DIFFUSERS SHALL BE PAINTED FLAT BLACK.

N. DRAWINGS ARE DIAGRAMMATIC AND SCHEMATIC ONLY, AND DO NOT SHOW ALL OFFSETS, BENDS,TRANSITIONS, DROPS, ETC. THAT MAY BE REQUIRED TO AVOID ALL OTHER BUILDING ELEMENTS. ALL WORK SHALL BE COORDINATED WITH ALL OTHER TRADES INVOLVED. OFFSETS IN DUCTS AND PIPING (INCLUDING DIVIDED DUCTS) AND TRANSITIONS AROUND OBSTRUCTIONS SHALL BE PROVIDED AT NO ADDITIONAL COST TO THE OWNER. IN GENERAL KEEP ALL DUCTWORK AS HIGH AS POSSIBLE. PREPARE COMPLETE COORDINATION AND SHOP DRAWINGS AS SPECIFIED.

O. REFER TO MANUFACTURERS RECOMMENDATIONS REGARDING INSTALLATION OF EQUIPMENT.

P. CONDENSATE DRAINS FROM AIR HANDLERS AND COILS SHALL BE COORDINATED FOR PROPER DRAINAGE TO SUIT EQUIPMENT FURNISHED. PROVIDE FULL SIZE DRAIN & TRAP FOR EACH UNIT.

Q. ACCESS DOORS IN DUCTWORK & CEILINGS SHALL BE FURNISHED WHERE REQUIRED FOR OPERATION & MAINTENANCE OF ALL FANS, DAMPERS AND MECHANICAL EQUIPMENT. PROVIDE FIRE DAMPERS IN ALL DUCTS THRU RATED WALLS OR SLABS.

R. ALL TAPS FOR LOW PRESSURE DUCT RUNOUTS SHALL BE AS INDICATED IN DRAWINGS AND DETAILS.

S. ALL TAPS IN LOW PRESSURE DUCTS FOR DIFFUSERS AND DUCTWORK BRANCH TAKEOFFS SHALL HAVE AN ADJUSTABLE VOLUME DAMPER.

T. PROVIDE DAMPERS IN EACH SUPPLY, RETURN, AND EXHAUST BRANCH FOR BALANCING.

U. ALL ELBOWS TO HAVE DOUBLE THICKNESS TURNING VANES.

V. PROVIDE AUXILIARY SUPPORT CHANNELS FOR HEATERS, DUCTS, VAV BOXES AND OTHER SUSPENDED EQUIPMENT.

W. PROVIDE ACCESS DOORS IN ALL DUCTWORK AT MAXIMUM 20 FT. INTERVALS FOR INSPECTION AND CLEANING.

X. ALL EXPOSED PIPING AND DUCTWORK IN FINISHED SPACES SHALL BE FIELD PAINTED.

Y. ALL LOW VOLTAGE AUTOMATIC TEMPERATURE CONTROL AND EMCS WIRING SHALL BE IN CONDUIT IN THE FOLLOWING LOCATIONS:

a. MECHANICAL ROOMS
b. ELECTRICAL ROOMS
c. DATA ROOMS
d. ALL AREAS WHERE WIRES ARE EXPOSED TO VIEW INCLUDING OPEN AREAS SUSPENDED CEILING "CLOUDS"
e. ALL AREAS WHERE WIRING MAY BE SUBJECT TO PHYSICAL DAMAGE.

Z. INSTALLATION OF AUTOMATIC TEMPERATURE CONTROL AND EMCS COMMUNICATION CONDUIT SYSTEM WITHIN BUILDINGS (WHERE REQUIRED) SHALL BE THE RESPONSIBILITY OF DIVISION 15.

BUILDING DESIGN DATA		
TEMPERATURES	SUMMER	OUTDOORS: 91°DB, 80°WB
	SUMMER	INDOORS: 76°DB, 63°WB (50% RH)
	WINTER	OUTDOORS: 42°DB
	WINTER	INDOORS: 70°DB
OUTSIDE AIR	OFFICES	5 CFM/PERSON + .06 CFM/SF
	CONFERENCE & MEETING ROOMS	5 CFM/PERSON + .06 CFM/SF
	CORRIDORS	.06 CFM/SF
VENTILATION	TOILETS	70 CFM/FIXTURE & ALL AIR EXHAUSTED
	ELECTRICAL ROOMS	AS REQUIRED FOR HEAT REMOVAL
	MISCELLANEOUS	LOCAL VENTILATION AS REQUIRED

LONG & ASSOCIATES
architects | engineers, inc.
4525 South Manhattan Avenue, Tampa, FL 33611-2305
T:813.839.0206 F:813.839.4616 AAC001624 IBDR CGC1511025
www.longandassociates.com

THIS DOCUMENT IS COPYRIGHT PROTECTED. THE INTENTION OF LONG & ASSOCIATES IS TO PROTECT THE RIGHTS OF THE PROFESSIONAL CONTRACTOR, ARCHITECT OR ENGINEER. © LONG & ASSOCIATES, ALL RIGHTS RESERVED

HILLSBOROUGH COUNTY SHERIFF'S OFFICE

PINEBROOK BUILDING 4 INTERIOR RENOVATION

1220 - 1238 TECH BLVD.
TAMPA, FL 33619

Seal

WILLIAM E. BROWN, P.E.
PE 57975

No.	Date	Issues & Revisions

TO THE BEST OF THE ARCHITECT'S AND/OR ENGINEER'S KNOWLEDGE THESE PLANS AND SPECIFICATIONS COMPLY WITH THE APPLICABLE MINIMUM BUILDING CODES AND THE APPLICABLE FIRE-SAFETY STANDARDS

Phase: 100% CONSTRUCTION DRAWINGS
Drawn By: CB
Checked By: BB
Job No: 19002
Date: SEPTEMBER 20, 2019
9/19/2019 4:43:58 PM

LEGEND & GENERAL NOTES

M0.1

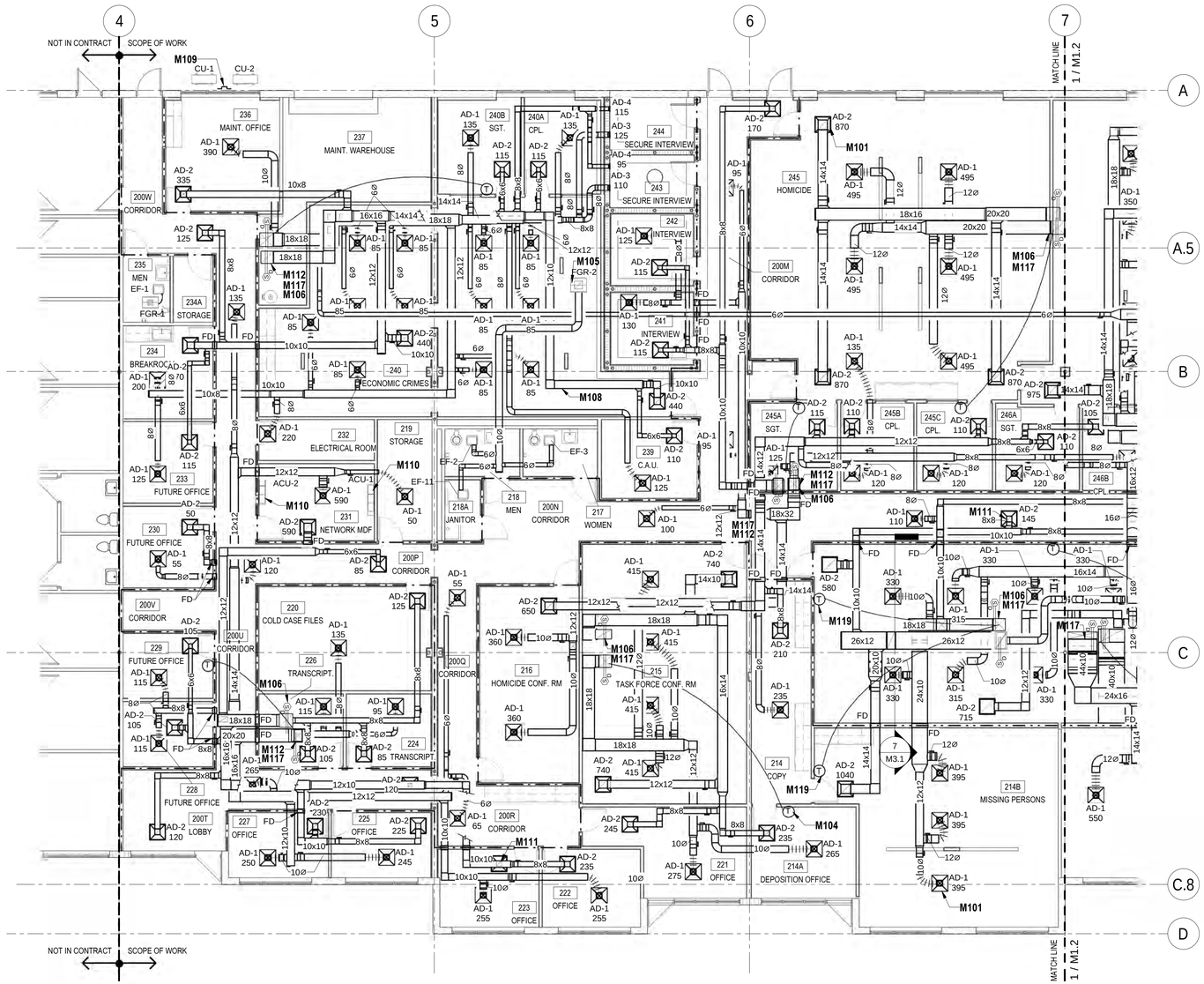

N 1 PARTIAL MECH HVAC PLAN

SCALE: 1/8" = 1'-0"

0' 4' 8' 16'

KEYNOTE LEGEND

NO.	DESCRIPTION
M101	NEW AIR DEVICE (TYPICAL WITHIN LIMITS OF CONSTRUCTION). UNLESS OTHERWISE NOTED.
M104	NEW THERMOSTAT (TYP).
M105	DUCT UP TO ROOF PENETRATION.
M106	DUCT SMOKE DETECTOR INSTALLED IN SUPPLY AND RETURN DUCT OF RTU.
M108	PROVIDE NEW DUCTWORK. PROVIDE VOLUME DAMPER IN EACH NEW BRANCH DUCT.
M109	PROVIDE STAINLESS STEEL COVER FOR REFRIGERANT LINES & CONTROLS WIRING ATTACH TO BUILDING WITH STAINLESS STEEL FASTENERS
M110	ROUTE CONDENSATE THROUGH WALL AND DISCHARGE TO LANDSCAPED AREA.
M111	PROVIDE VOLUME DAMPER IN VERTICAL.
M112	PROVIDE FIRE RATED ROOF ENCLOSURE AROUND DUCT PENETRATION TO PROVIDE RATING AROUND DUCT WORK.
M117	DUCT WORK UP TO ROOF TOP UNIT.
M119	RTU-10 TO HAVE (2) THERMOSTATS. HIGHEST DEMAND TO CONTROL UNIT.

DRAWING KEY

1 - HR FIRE RATED WALL.

2 - HR FIRE RATED WALL.

NOTE: COORDINATE LOCATIONS AND TYPE OF FIRE-RATED WALL CONSTRUCTION AS WELL AS THROUGH-WALL PENETRATIONS WITH ARCHITECTURAL DRAWINGS.

FD: PROVIDE FIRE DAMPER IN DUCTWORK PENETRATING FIRE-RATED WALLS.

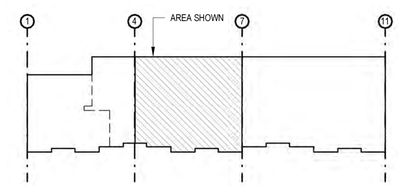

A KEY PLAN

SCALE: NTS

LONG & ASSOCIATES
architects | engineers, inc.
4525 South Manhattan Avenue, Tampa, FL 33611-2305
T:813.839.0506 F:813.839.4616 AA C001624 IB28 CGC1511025
www.longandassociates.com

THIS DOCUMENT IS COPYRIGHTED IN A NOTE TO CLIENT, AND REMAINS THE SOLE PROPERTY OF LONG & ASSOCIATES. ALL RIGHTS RESERVED.

HILLSBOROUGH COUNTY SHERIFF'S OFFICE

PINEBROOK BUILDING 4 INTERIOR RENOVATION

1220 - 1238 TECH BLVD.
TAMPA, FL 33619

Seal

WILLIAM E. BROWN, P.E.
PE 57975

No.	Date	Issues & Revisions

TO THE BEST OF THE ARCHITECT'S AND/OR ENGINEER'S KNOWLEDGE THESE PLANS AND SPECIFICATIONS COMPLY WITH THE APPLICABLE MINIMUM BUILDING CODES AND THE APPLICABLE FIRE-SAFETY STANDARDS

Phase: 100% CONSTRUCTION DRAWINGS
Drawn By: CB
Checked By: BB
Job No: 19002
Date: SEPTEMBER 20, 2019
9/19/2019 4:44:12 PM

PARTIAL MECH HVAC PLAN

M1.1

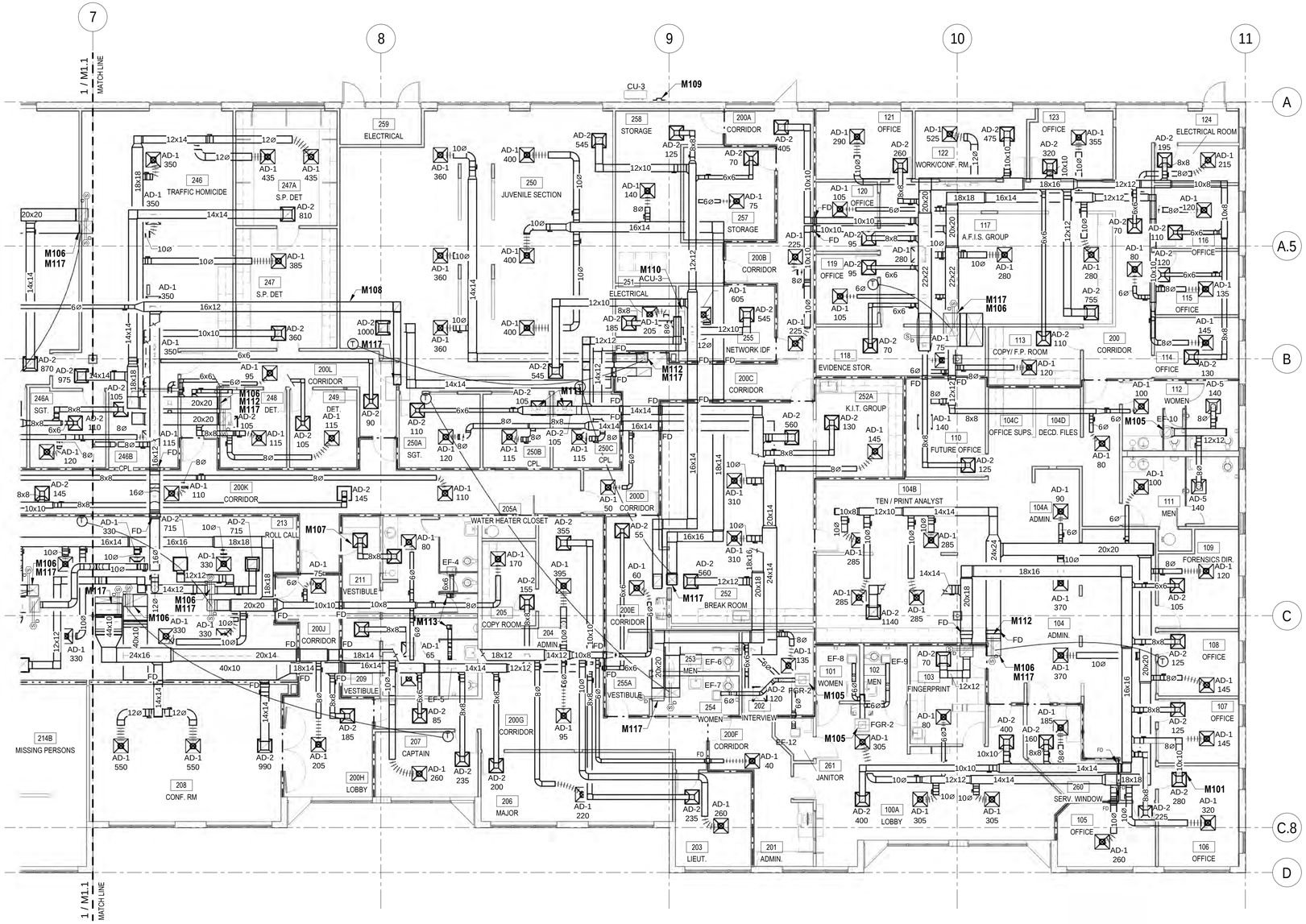

N 1 PARTIAL MECH HVAC PLAN

SCALE: 1/8" = 1'-0"

0' 4' 8' 16'

KEYNOTE LEGEND

NO.	DESCRIPTION
M101	NEW AIR DEVICE (TYPICAL WITHIN LIMITS OF CONSTRUCTION). UNLESS OTHERWISE NOTED.
M105	DUCT UP TO ROOF PENETRATION.
M106	DUCT SMOKE DETECTOR INSTALLED IN SUPPLY AND RETURN DUCT OF RTU.
M107	NEW TRANSFER DUCT WITH (2) AD-2 AIR DEVICES (TYP)
M108	PROVIDE NEW DUCTWORK. PROVIDE VOLUME DAMPER IN EACH NEW BRANCH DUCT.
M109	PROVIDE STAINLESS STEEL COVER FOR REFRIGERANT LINES & CONTROLS WIRING ATTACH TO BUILDING WITH STAINLESS STEEL FASTENERS
M110	ROUTE CONDENSATE THROUGH WALL AND DISCHARGE TO LANDSCAPED AREA.
M111	PROVIDE VOLUME DAMPER IN VERTICAL.
M112	PROVIDE FIRE RATED ROOF ENCLOSURE AROUND DUCT PENETRATION TO PROVIDE RATING AROUND DUCT WORK.
M113	ROUTE EXHAUST DUCT THROUGH EXISTING ROOF CAP.
M117	DUCT WORK UP TO ROOF TOP UNIT.

DRAWING KEY

1 - HR FIRE RATED WALL.

2 - HR FIRE RATED WALL.

NOTE: COORDINATE LOCATIONS AND TYPE OF FIRE-RATED WALL CONSTRUCTION AS WELL AS THROUGH-WALL PENETRATIONS WITH ARCHITECTURAL DRAWINGS.

FD: PROVIDE FIRE DAMPER IN DUCTWORK PENETRATING FIRE-RATED WALLS.

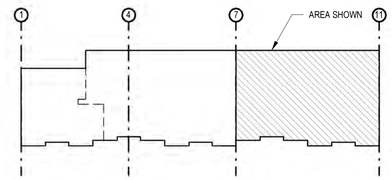

A KEY PLAN

SCALE: NTS

LONG & ASSOCIATES
architects | engineers, inc.
4525 South Manhattan Avenue, Tampa, FL 33611-2305
T:813.839.0506 F:813.839.4616 AA C001424 IBDB CGC1511025
www.longandassociates.com

THIS DOCUMENT IS COPYRIGHTED MATERIAL AND THE CLIENT IS GRANTED USE FOR THIS PROJECT. REPRODUCTIONS WITHOUT WRITTEN CONSENT OF LONG & ASSOCIATES ARE PROHIBITED. ALL RIGHTS RESERVED.

HILLSBOROUGH COUNTY SHERIFF'S OFFICE

PINEBROOK BUILDING 4 INTERIOR RENOVATION

1220 - 1238 TECH BLVD.
TAMPA, FL 33619

Seal

WILLIAM E. BROWN, P.E.
PE 57975

No.	Date	Issues & Revisions

TO THE BEST OF THE ARCHITECT'S AND/OR ENGINEER'S KNOWLEDGE THESE PLANS AND SPECIFICATIONS COMPLY WITH THE APPLICABLE MINIMUM BUILDING CODES AND THE APPLICABLE FIRE-SAFETY STANDARDS

Phase: 100% CONSTRUCTION DRAWINGS
Drawn By: CB
Checked By: BB
Job No: 19002
Date: SEPTEMBER 20, 2019
9/19/2019 4:44:27 PM

PARTIAL MECH HVAC PLAN

M1.2

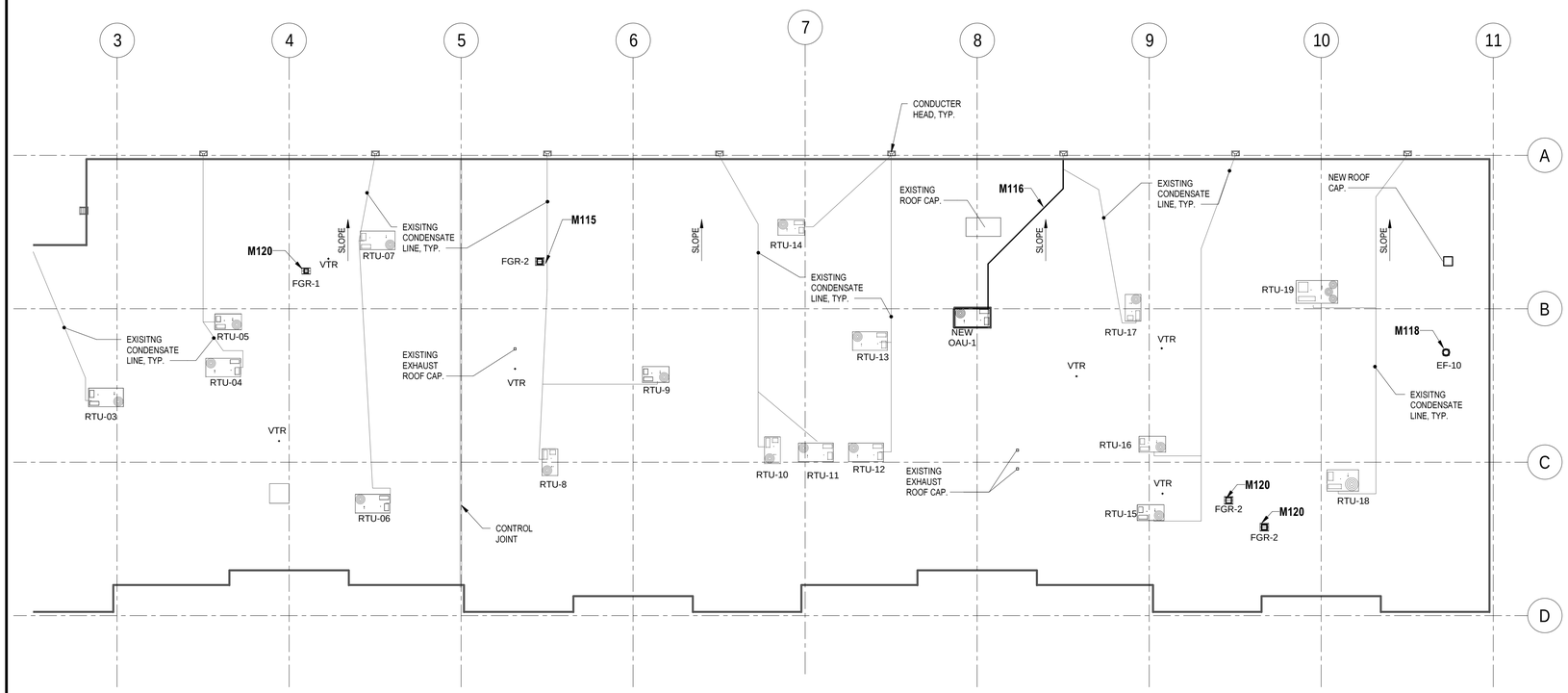

N

1 MECH OVERALL MECH ROOF PLAN

SCALE: 1/16" = 1'-0"

0' 4' 8' 16'

KEYNOTE LEGEND

NO.	DESCRIPTION
M115	INSTALL FGR ON EXISTING ROOF CURB. PROVIDE WITH CURB ADAPTER.
M116	ROUTE CONDENSATE DRAIN TO CONDUCTOR HEAD.
M118	INSTALL FAN ON EXISTING ROOF CURB.
M120	PROVIDE FGR WITH NEW ROOF CURB.

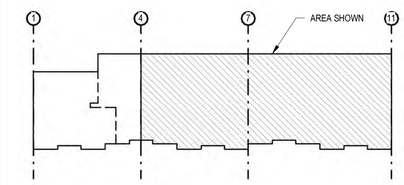

A KEY PLAN

SCALE: NTS

LONG & ASSOCIATES
architects | engineers, inc.
4525 South Manhattan Avenue, Tampa, FL 33611-2305
T:813.839.0506 F:813.839.4616 AAC0001624 IB28 CGC1511025
www.longandassociates.com

THIS DOCUMENT IS COPYRIGHT PROTECTED. THE INTERPRETATION OF DATA CONTAINED HEREIN IS THE EXCLUSIVE PROPERTY OF LONG & ASSOCIATES AND MAY NOT BE REPRODUCED WITHOUT WRITTEN PERMISSION. ALL RIGHTS RESERVED.

HILLSBOROUGH COUNTY SHERIFF'S OFFICE

PINEBROOK BUILDING 4 INTERIOR RENOVATION

1220 - 1238 TECH BLVD.
TAMPA, FL 33619

Seal

WILLIAM E. BROWN, P.E.
PE 57975

No.	Date	Issues & Revisions

TO THE BEST OF THE ARCHITECT'S AND/OR ENGINEER'S KNOWLEDGE THESE PLANS AND SPECIFICATIONS COMPLY WITH THE APPLICABLE MINIMUM BUILDING CODES AND THE APPLICABLE FIRE-SAFETY STANDARDS

Phase: 100% CONSTRUCTION DRAWINGS
Drawn By: CB
Checked By: BB
Job No: 19002
Date: SEPTEMBER 20, 2019
9/19/2019 4:44:30 PM

OVERALL MECH ROOF PLAN

M2.1

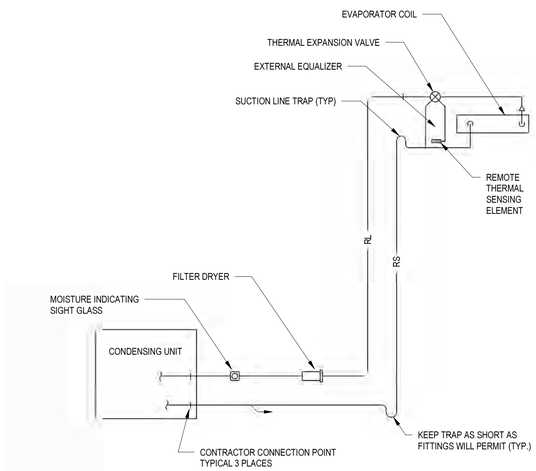

6 SPLIT SYSTEM REFRIGERANT PIPING DIAGRAM

SCALE: NTS

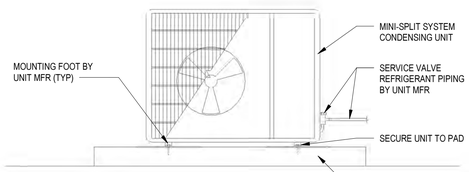

NOTE:
EQUIPMENT TIE DOWNS/ANCHORAGE TO BE CALCULATED BY SPECIALTY ENGINEER. SEE SHEDULE FOR DETAILS.

CONTRACTOR TO VERIFY DIMENSIONS WITH REVIEWED SUBMITTAL.

5 MINI-SPLIT CONDENSING UNIT MOUNTING

SCALE: NTS

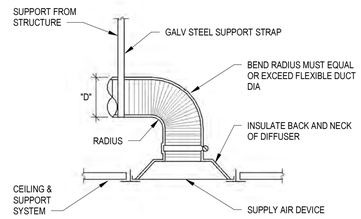

LAY-IN AND PANEL MOUNTED SUPPLY AIR DEVICES

NOTE:

PROVIDE RIGID DUCT CONNECTIONS FOR DUCTS LOCATED ABOVE INACCESSIBLE CEILINGS

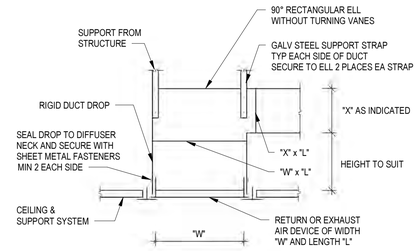

LAY-IN AND PANEL MOUNTED RETURN OR EXHAUST AIR DEVICES

NOTES:

1. INSULATION OMITTED FOR CLARITY.
2. PAINT INSIDE OF DUCTWORK THAT IS VISIBLE THROUGH AIR DEVICE FLAT BLACK.

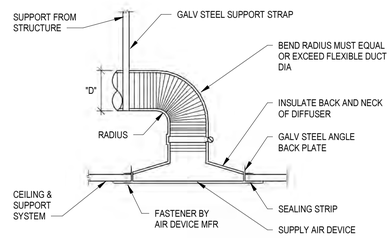

SURFACE MOUNTED SUPPLY AIR DEVICE

NOTE:

PROVIDE RIGID DUCT CONNECTIONS FOR DUCTS LOCATED ABOVE INACCESSIBLE CEILINGS

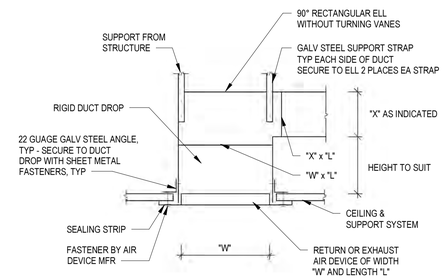

SURFACE MOUNTED RETURN OR EXHAUST AIR DEVICES

NOTES:

1. INSULATION OMITTED FOR CLARITY.
2. PAINT INSIDE OF DUCTWORK THAT IS VISIBLE THROUGH AIR DEVICE FLAT BLACK.

2 AIR DEVICE CONNECTION DETAILS

SCALE: NTS

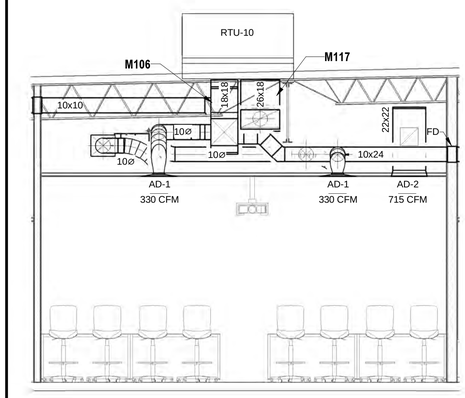

7 BUILDING SECTION ROLL CALL

SCALE: 1/4" = 1'-0"

0' 4' 8' 16'

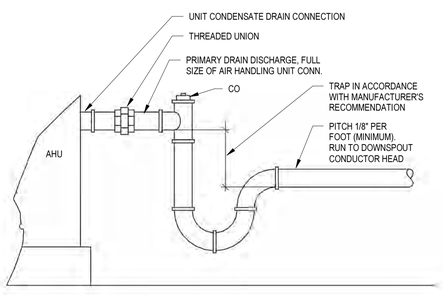

4 AHU CONDENSATE DRAIN DETAIL

SCALE: NTS

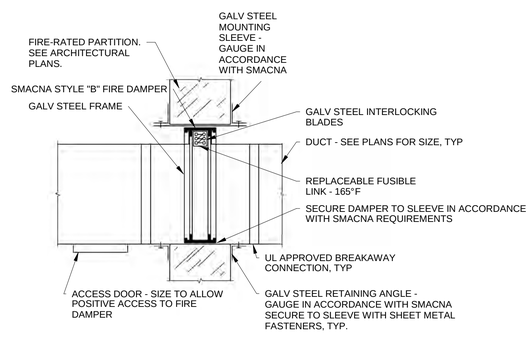

3 FIRE DAMPER DETAIL

SCALE: NTS

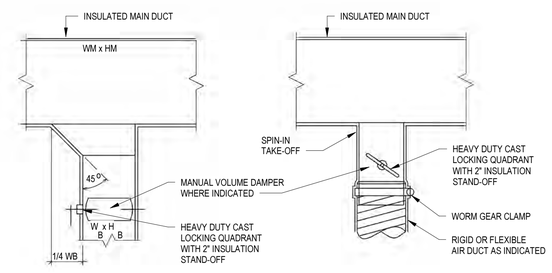

TAPERED ENTRY/TAKEOFF

TYPICAL AT RECTANGULAR RETURN AND EXHAUST DUCTS AND RECTANGULAR SUPPLY RUNOUTS TO SIDEWALL AIR DEVICES

RUNOUT TO SUPPLY AIR DEVICE

TYPICAL AT ROUND RUNOUTS TO SUPPLY AIR DEVICES

1 BRANCH DUCT DETAILS

SCALE: NTS

KEYNOTE LEGEND

NO.	DESCRIPTION
M106	DUCT SMOKE DETECTOR INSTALLED IN SUPPLY AND RETURN DUCT OF RTU.
M117	DUCT WORK UP TO ROOF TOP UNIT.

LONG & ASSOCIATES
architects | engineers, inc.
4525 South Manhattan Avenue, Tampa, FL 33611-2305
T:813.839.0506 F:813.839.4616 AAC001624 IB28 CGC1511025
www.longandassociates.com

THIS DOCUMENT IS COPYRIGHTED IN THE STATE OF FLORIDA. THE INTENTS OF LEASING AND PUBLICATION REQUIRE THE EXPRESS WRITTEN CONSENT OF LONG & ASSOCIATES. ALL RIGHTS RESERVED.

HILLSBOROUGH COUNTY SHERIFF'S OFFICE

PINEBROOK BUILDING 4 INTERIOR RENOVATION

1220 - 1238 TECH BLVD.
TAMPA, FL 33619

Seal

WILLIAM E. BROWN, P.E.
PE 57975

No.	Date	Issues & Revisions

TO THE BEST OF THE ARCHITECT'S AND/OR ENGINEER'S KNOWLEDGE THESE PLANS AND SPECIFICATIONS COMPLY WITH THE APPLICABLE MINIMUM BUILDING CODES AND THE APPLICABLE FIRE-SAFETY STANDARDS

Phase: 100% CONSTRUCTION DRAWINGS
Drawn By: CB
Checked By: BB
Job No: 19002
Date: SEPTEMBER 20, 2019
9/19/2019 4:44:36 PM

DETAILS

M3.1

ROOFTOP UNIT SCHEDULE

GENERAL		AIR QUANTITIES		FAN DATA					COOLING COIL DATA									
TAG	TYPE	SUPPLY AIR (CFM)	OUTSIDE AIR (CFM)	DRIVE	# OF FANS	ESP (IN WC)	TOTAL BHP	HP PER FAN	TOTAL MBH	SENSIBLE MBH	EDB/EWB (°F)	LDB/LWB (°F)	COIL FACE VEL (FPM)	ROWS	FINS PER IN.	---	AIR PD (IN WC)	---
RTU-6	EXISTING ROOFTOP UNIT	2965	235	---	---	---	---	---	---	---	---/---	---/---	---	---	---	---	---	---
RTU-7	EXISTING ROOFTOP UNIT	2585	360	---	---	---	---	---	---	---	---/---	---/---	---	---	---	---	---	---
RTU-8	EXISTING ROOFTOP UNIT	2175	240	---	---	---	---	---	---	---	---/---	---/---	---	---	---	---	---	---
RTU-9	EXISTING ROOFTOP UNIT	2235	215	---	---	---	---	---	---	---	---/---	---/---	---	---	---	---	---	---
RTU-10	EXISTING ROOFTOP UNIT	2175	260	---	---	---	---	---	---	---	---/---	---/---	---	---	---	---	---	---
RTU-11	EXISTING ROOFTOP UNIT	2635	265	---	---	---	---	---	---	---	---/---	---/---	---	---	---	---	---	---
RTU-12	EXISTING ROOFTOP UNIT	3030	585	---	---	---	---	---	---	---	---/---	---/---	---	---	---	---	---	---
RTU-13	EXISTING ROOFTOP UNIT	2980	220	---	---	---	---	---	---	---	---/---	---/---	---	---	---	---	---	---
RTU-14	EXISTING ROOFTOP UNIT	2475	205	---	---	---	---	---	---	---	---/---	---/---	---	---	---	---	---	---
RTU-15	EXISTING ROOFTOP UNIT	1905	190	---	---	---	---	---	---	---	---/---	---/---	---	---	---	---	---	---
RTU-16	EXISTING ROOFTOP UNIT	1415	125	---	---	---	---	---	---	---	---/---	---/---	---	---	---	---	---	---
RTU-17	EXISTING ROOFTOP UNIT	1080	75	---	---	---	---	---	---	---	---/---	---/---	---	---	---	---	---	---
RTU-18	EXISTING ROOFTOP UNIT	4240	545	---	---	---	---	---	---	---	---/---	---/---	---	---	---	---	---	---
RTU-19	EXISTING ROOFTOP UNIT	3880	390	---	---	---	---	---	---	---	---/---	---/---	---	---	---	---	---	---
OAU-1	OUTSIDE AIR UNIT	1125	1125	ECM	1	1	0.51	2.5	106.3	51.4	95/80	54.2/53.9	197	6	12	---	0.15	---

	HEAT	FILTER DATA				ELECTRICAL DATA			MISCELLANEOUS				
TAG	KW	TYPE	EFF (MERV)	FILTER PD (IN WC)	FILTER AREA (SQ. FT.)	VOLTS/PHASE	MCA (A)	MOCP (A)	OPERATING WEIGHT	MFR	MODEL	SERIAL	NOTES
RTU-6	---	---	---	---	---	208/3	34.0	50	605	CARRIER	50TC-A07A2B5A0A0A0	2313C75442	1, 2
RTU-7	---	---	---	---	---	208/3	32.8	50	605	CARRIER	50TC-A07A2B5A0A0A0	0812C65098	1, 2, 7
RTU-8	---	---	---	---	---	208/3	28.2	40	605	TRANE	TSC060G3E0A01	175210433L	1, 2
RTU-9	---	---	---	---	---	208/3	28.2	40	605	TRANE	TSC060G3E0A01	180110956L	1, 2, 8
RTU-10	---	---	---	---	---	208/3	28.2	40	605	TRANE	TSC060G3E0A01	180210489L	1, 2, 8
RTU-11	---	---	---	---	---	208/3	36.5	50	760	TRANE	TSC072F3E0A1F	175210475L	1, 2
RTU-12	---	---	---	---	---	208/3	33.0	50	605	ICP	RAS072H0AA0AAAA	C142782038	1, 2, 8
RTU-13	---	---	---	---	---	208/3	33.0	50	605	ICP	RAS072H0AA0AAAA	C132877290	1, 2
RTU-14	---	---	---	---	---	208/3	28.0	40	525	CARRIER	50TC-A06A2B5A0A0A0	1214C83032	1, 2
RTU-15	---	---	---	---	---	208/3	28.2	40	605	TRANE	TSC060G3E0A01	180210503L	1, 2
RTU-16	---	---	---	---	---	208/3	19.8	30	535	TRANE	TSC060G3E0A01	173910180L	1
RTU-17	---	---	---	---	---	208/3	19.8	30	535	TRANE	TSC060G3E0A01	173910376L	1
RTU-18	---	---	---	---	---	208/3	61.0	80	1780	TRANE	TSD150G3R0A	175010400D	1, 2
RTU-19	---	---	---	---	---	208/3	61.0	80	1780	TRANE	TSD150G3R0A	175010406D	1, 2
OAU-1	15	---	8	---	---	208/3	68.4	90	1430	TRANE	OABD108E3-D1D400AB-D3...	---	2, 3, 4, 5, 6, 9

NOTES:

1. EXISTING ROOFTOP UNIT TO BE BALANCED TO NEW AIRFLOWS.
2. PROVIDE SMOKE DETECTORS IN SUPPLY & RETURN AIR DUCTS.
3. PROVIDE WITH UNIT CONTROLLER - UC600
4. PROVIDE WITH OUTSIDE AIR DAMPER, VARIABLE SPEED SCROLL COMPRESSOR MODULATING HOT GAS REHEAT, SCR MODULATING ELECTRIC HEAT, 2IN. DOUBLE WALL CONSTRUCTION, VERTICAL DISCHARGE, IFM FAN PIEZO RING / TAP AIR FLOW MONITOR, WARRANTY ONE YEAR PARTS / FIVE YEAR COMPRESSOR.
5. PROVIDE WITH FL PRODUCT APPROVAL NO. PROVIDE WIND LOAD TIE DOWN CALCULATIONS BY SPECIALTY ENGINEER.
6. CONDITIONED AIR TO BE ROUTED TO THE RETURN SIDE OF THE ROOFTOP UNIT AS FOLLOWS:
   - 65 CFM TO RTU-7
   - 215 CFM TO RTU-9
   - 260 CFM TO RTU- 10
   - 585 CFM TO RTU-12
7. 65 CFM OF THE OUTSIDE AIR IS PROVIDED BY OAU-1. RAW OUTSIDE AIR INTAKE AT UNIT IS 295 CFM. TOTAL OUTSIDE AIR INTAKE AT UNIT IS 360 CFM.
8. OUTSIDE AIR PROVIDED BY OAU-1. SEE NOTE 6 FOR DETAIL.
9. OUTSIDE AIR UNIT TO OPERATE DURING OCCUPIED MODE.

FAN SCHEDULE

TAG	TYPE	DRIVE	CAPACITY (CFM)	ESP (IN WC)	MAX SONES	MOTOR POWER	VOLTS	PHASE	MAX WEIGHT	MANUFACTURER	MODEL	NOTES
EF-1	EXHAUST	DIRECT	70	.25	1.3	20 W	115	1	11	GREENHECK	SP-B90	---
EF-2	EXHAUST	DIRECT	70	.25	1.3	20 W	115	1	11	GREENHECK	SP-B90	---
EF-3	EXHAUST	DIRECT	70	.25	1.3	20 W	115	1	11	GREENHECK	SP-B90	---
EF-4	EXHAUST	DIRECT	210	0.25	1.5	48 W	115	1	25	GREENHECK	SP-A200	---
EF-5	EXHAUST	DIRECT	140	0.25	2	128 W	115	1	11	GREENHECK	SP-B150	---
EF-6	EXHAUST	DIRECT	70	.25	1.3	20 W	115	1	11	GREENHECK	SP-B90	---
EF-7	EXHAUST	DIRECT	70	.25	1.3	20 W	115	1	11	GREENHECK	SP-B90	---
EF-8	EXHAUST	DIRECT	70	.25	1.3	20 W	115	1	11	GREENHECK	SP-B90	---
EF-9	EXHAUST	DIRECT	70	.25	1.3	20 W	115	1	11	GREENHECK	SP-B90	---
EF-10	EXHAUST	DIRECT	280	0.375	5.5	1/8	115	1	31	GREENHECK	G-095-D	1, 2
EF-11	EXHAUST	DIRECT	70	.25	1.3	20 W	115	1	11	GREENHECK	SP-B90	---
EF-12	EXHAUST	DIRECT	70	.25	1.3	20 W	115	1	11	GREENHECK	SP-B90	---

NOTES:

1. INTERLOCK WITH RTU.
2 . PROVIDE WITH CURB ADAPTER AS REQUIRED.

GRAVITY RELIEF HOOD SCHEDULE

MARK	SERVES	CFM	ESP	THROAT SIZE	OVERALL SIZE	MANUFACTURER	MODEL	CURB OUTSIDE DIMENSIONS	NOTES
FGR-1	RESTROOM	70	0.006	8x8	18x24	GREENHECK	FGR	18x18	ALL
FGR-2	RESTROOM	140	0.005	12x12	22x24	GREENHECK	FGR	18x18	ALL

REMARKS:

1. HOOD AND CURB SHALL MEET THE REQUIREMENTS OF THE FLORIDA BUILDING CODE # FL12917.1-R2 (MIAMI DADE COUNTY NOA# 14-0513-10) TEST PROTOCOLS TAS 201, TAS 202 AND TAS 203.
2. FURNISH WITH GALVANIZED STEEL BIRD SCREEN.
3. PROVIDE WITH NEW CURB FOR NEW ROOF PENETRATION.
4. HOOD MANUFACTURER SHALL DESIGN CURB AND HOOD ANCHORING DETAILS TO WITHSTAND WIND LOADS AS REQUIRED BY FLORDIA BUILING CODE.

DUCTLESS SPLIT SYSTEM SCHEDULE

TAG	COOLING	MAX. COIL AIRFLOW	SEER	FAN FLA	COMP FLA	COMP MCA	MOCP	VOLTS	PHASE	FREQUENCY (HZ)	MANUFACTURER	MODEL	NOTES
ACU-1 / CU-1	36,000 BTU/HR	434 CFM	19	0.37 A	16.25 A	17 A	20 A	208	1	60	DAIKIN	FTX36NVJU / RK36NMVJU	1, 2, 3, 4, 5
ACU-2 / CU-2	36,000 BTU/HR	434 CFM	19	0.37 A	16.25 A	17 A	20 A	208	1	60	DAIKIN	FTX36NVJU / RK36NMVJU	1, 2, 3, 4, 5
ACU-3 / CU-3	36,000 BTU/HR	434 CFM	19	0.37 A	16.25 A	17 A	20 A	208	1	60	DAIKIN	FTX36NVJU / RK36NMVJU	1, 2, 3, 4, 5

NOTES:

1. PROVIDE WITH SINGLE POINT POWER, INTEGRAL THERMOSTAT AND PERMANENT CLEANABLE FILTER.
2. DISCONNECT BY DIVISION 26.
3. PROVIDE WIND LOAD TIE DOWN CALCULATIONS BY SPECIALTY ENGINEER.
4. PROVIDE CONDENSATE PUMP WITH INDOOR UNIT.
5. PROVIDE PLASTIC PIPE COVER TO CONCEAL REFRIGERANT PIPES AND WIRING.

AIR DEVICE SCHEDULE

TAG	SERVICE	TYPE	BORDER	NECK SIZE (IN)	FACE SIZE (IN)	AIR VOLUME (CFM)	MAX SP LOSS (IN WC)	MAX NC	MATERIAL	FINISH	MFR	MODEL	NOTES
AD-1	CEILING DIFFUSER	SQUARE FACE	LAY-IN	SEE PLANS	24x24	SEE PLANS	0.10	<20	ALUMINUM	WHITE	TITUS	TMS-AA	1
AD-2	RETURN GRILLE	EGGCRATE	LAY-IN	SEE PLANS	24x24	SEE PLANS	0.10	<20	ALUMINUM	WHITE	TITUS	50F	1
AD-3	SUPPLY SIDE DIFFUSER	MSRP	---	SEE PLANS	24x12	SEE PLANS	---	<30	STEEL	WHITE	TITUS	SG-SD	2
AD-4	RETURN SIDE DIFFUSER	MSRP	---	SEE PLANS	24x12	SEE PLANS	---	<30	STEEL	WHITE	TITUS	SG-SD	2
AD-5	EXHAUST DIFFUSER	EGGCRATE	SURFACE MOUNT	SEE PLANS	24x24	SEE PLANS	0.10	<30	ALUMINUM	WHITE	PRICE	80	1

NOTES:

1. AIR VOLUME, MAX SP LOSS AND MAX NC ARE TO DEFINE PERFORMANCE ONLY. SEE PLANS FOR ACTUAL AIR VOLUME.
2. SUICIDE DETERRENT

LONG & ASSOCIATES
architects | engineers, inc.
4525 South Manhattan Avenue, Tampa, FL 33611-2305
T:813.839.0506 F:813.839.4616 AAC001624 1828 CGC1511025
www.longandassociates.com

HILLSBOROUGH COUNTY SHERIFF'S OFFICE

PINEBROOK BUILDING 4 INTERIOR RENOVATION

1220 - 1238 TECH BLVD.
TAMPA, FL 33619

Seal

WILLIAM E. BROWN, P.E.
PE 57975

No.	Date	Issues & Revisions

TO THE BEST OF THE ARCHITECT'S AND/OR ENGINEER'S KNOWLEDGE THESE PLANS AND SPECIFICATIONS COMPLY WITH THE APPLICABLE MINIMUM BUILDING CODES AND THE APPLICABLE FIRE-SAFETY STANDARDS

Phase: 100% CONSTRUCTION DRAWINGS
Drawn By: AA
Checked By: BB
Job No: 19002
Date: SEPTEMBER 20, 2019
9/19/2019 4:44:41 PM

SCHEDULES

M4.1

N 1 PARTIAL PLUMB DEMOLITION PLAN

SCALE: 1/8" = 1'-0"

0' 4' 8' 16'

KEYNOTE LEGEND

NO.	DESCRIPTION
PD101	REMOVE ALL DOMESTIC WATER PIPE SERVING THESE TOILET ROOMS UP TO THE 2 IN. MAIN PIPE AND CAP.
PD102	REMOVE PLUMBING FIXTURE. PREPARE SANITARY FOR FUTURE CONNECTION. ALL FIXTURES IN THIS ROOM UNLESS OTHERWISE NOTED.
PD103	REMOVE PLUMBING FIXTURE. REMOVE SANITARY PIPE AND CAP BELOW FLOOR. REMOVE DOMESTIC WATER PIPE TO SOURCE AND CAP.
PD105	REMOVE WATER HEATER AND WATER SUPPLY PIPE TO SOURCE AND CAP.
PD106	REMOVE FLOOR DRAIN. CAP SANITARY BELOW SLAB. PATCH TO MATCH EXISTING.
PD107	DEMOLISH EXISTING FLOOR FLANGE. SAW CUT FLOOR TO NEW WATER CLOSET LOCATION.
PD108	REMOVE PLUMBING FIXTURE. REMOVE ALL SUPPLY PIPE SERVING THIS FIXTURE UP TO THE MAIN PIPE AND CAP. REMOVE ALL SANITARY AND VENT PIPES TO ABOVE CEILING AND BELLOW SLAB. CAP AND PATCH TO MATCH EXISTING.
PD109	SAW CUT FLOOR FOR THE INSTALLATION OF NEW SANITARY PIPES. FIELD LOCATE ALL SANITARY PIPE PRIOR TO CUTTING SLAB.
PD111	SAW CUT FLOOR FOR THE INSTALLATION OF THE FLOOR DRAINS. FIELD LOCATE ALL SANITARY PIPE PRIOR TO CUTTING SLAB.
PD112	EXISTING DOMESTIC WATER PIPE TO REMAIN.

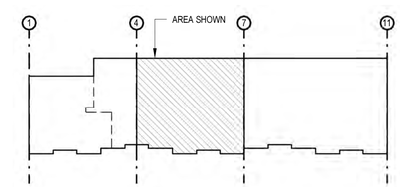

A KEY PLAN

SCALE: NTS

LONG & ASSOCIATES
architects | engineers, inc.
4525 South Manhattan Avenue, Tampa, FL 33611-2305
T:813.839.0206 F:813.839.4616 AAC0010624 IBPE CGC1511025
www.longandassociates.com

THIS DOCUMENT IS COPYRIGHTED IN A NOTICE FORM. THE PROPERTY OF LONG & ASSOCIATES. REPRODUCTION OR REPRODUCTION WITHOUT THE EXPRESS WRITTEN CONSENT OF LONG & ASSOCIATES IS PROHIBITED. ALL RIGHTS RESERVED.

HILLSBOROUGH COUNTY SHERIFF'S OFFICE

PINEBROOK BUILDING 4 INTERIOR RENOVATION

1220 - 1238 TECH BLVD.
TAMPA, FL 33619

Seal

WILLIAM E. BROWN, P.E.
PE 57975

No.	Date	Issues & Revisions

TO THE BEST OF THE ARCHITECT'S AND/OR ENGINEER'S KNOWLEDGE THESE PLANS AND SPECIFICATIONS COMPLY WITH THE APPLICABLE MINIMUM BUILDING CODES AND THE APPLICABLE FIRE-SAFETY STANDARDS

Phase: 100% CONSTRUCTION DRAWINGS
Drawn By: CB
Checked By: BB
Job No: 19002
Date: SEPTEMBER 20, 2019
9/19/2019 4:40:52 PM

PARTIAL PLUMB DEMOLITION PLAN

DP1.1

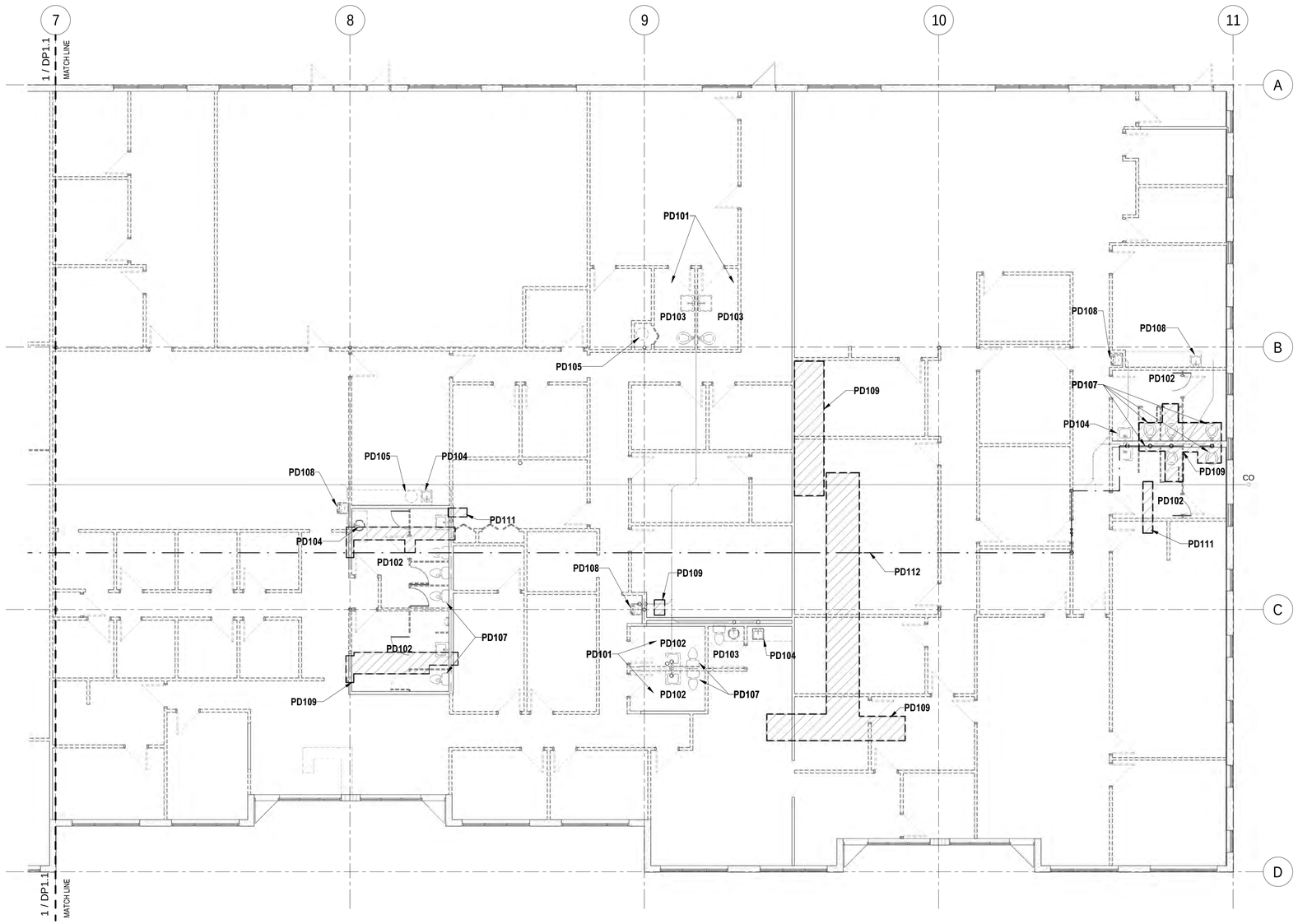

N (1) PARTIAL PLUMB DEMOLITION PLAN

SCALE: 1/8" = 1'-0"

0' 4' 8' 16'

KEYNOTE LEGEND

NO.	DESCRIPTION
PD101	REMOVE ALL DOMESTIC WATER PIPE SERVING THESE TOILET ROOMS UP TO THE 2 IN. MAIN PIPE AND CAP.
PD102	REMOVE PLUMBING FIXTURE. PREPARE SANITARY FOR FUTURE CONNECTION. ALL FIXTURES IN THIS ROOM UNLESS OTHERWISE NOTED.
PD103	REMOVE PLUMBING FIXTURE. REMOVE SANITARY PIPE AND CAP BELOW FLOOR. REMOVE DOMESTIC WATER PIPE TO SOURCE AND CAP.
PD104	DEMOLISH SINK. PREPARE PIPING FOR NEW SINK.
PD105	REMOVE WATER HEATER AND WATER SUPPLY PIPE TO SOURCE AND CAP.
PD107	DEMOLISH EXISTING FLOOR FLANGE. SAW CUT FLOOR TO NEW WATER CLOSET LOCATION.
PD108	REMOVE PLUMBING FIXTURE. REMOVE ALL SUPPLY PIPE SERVING THIS FIXTURE UP TO THE MAIN PIPE AND CAP. REMOVE ALL SANITARY AND VENT PIPES TO ABOVE CEILING AND BELLOW SLAB. CAP AND PATCH TO MATCH EXISTING.
PD109	SAW CUT FLOOR. FOR THE INSTALLATION OF NEW SANITARY PIPES. FIELD LOCATE ALL SANITARY PIPE PRIOR TO CUTTING SLAB.
PD111	SAW CUT FLOOR FOR THE INSTALLATION OF THE FLOOR DRAINS. FIELD LOCATE ALL SANITARY PIPE PRIOR TO CUTTING SLAB.
PD112	EXISTING DOMESTIC WATER PIPE TO REMAIN.

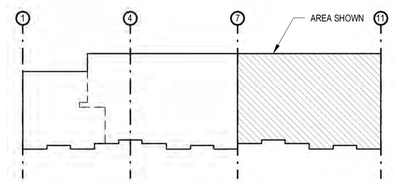

(A) KEY PLAN

SCALE: NTS

LONG & ASSOCIATES
architects | engineers, inc.
4525 South Manhattan Avenue, Tampa, FL 33611-2305
T:813.839.0506 F:813.839.4616 AAC0010424 IBDR CGC1511025
www.longandassociates.com

THIS DOCUMENT IS COPYRIGHTED IN THE UNITED STATES OF AMERICA AND WORLDWIDE UNDER INTERNATIONAL COPYRIGHT CONVENTIONS. REPRODUCTION OR REUSE WITHOUT EXPRESS WRITTEN CONSENT OF LONG & ASSOCIATES IS PROHIBITED. ALL RIGHTS RESERVED.

HILLSBOROUGH COUNTY SHERIFF'S OFFICE

PINEBROOK BUILDING 4 INTERIOR RENOVATION

1220 - 1238 TECH BLVD.
TAMPA, FL 33619

Seal

WILLIAM E. BROWN, P.E.
PE 57975

No.	Date	Issues & Revisions

TO THE BEST OF THE ARCHITECT'S AND/OR ENGINEER'S KNOWLEDGE THESE PLANS AND SPECIFICATIONS COMPLY WITH THE APPLICABLE MINIMUM BUILDING CODES AND THE APPLICABLE FIRE-SAFETY STANDARDS

Phase: 100% CONSTRUCTION DRAWINGS
Drawn By: CB
Checked By: BB
Job No: 19002
Date: SEPTEMBER 20, 2019
9/19/2019 4:40:59 PM

PARTIAL PLUMB DEMOLITION PALN

DP1.2

GENERAL NOTES:

A. PLUMBING WORK SHALL CONFORM TO APPLICABLE PLUMBING CODES.

B. THE DRAWINGS ARE DIAGRAMMATIC, SHOWING THE INTENT AND GENERAL ARRANGEMENT OF THE DRAWINGS ARE DIAGRAMMATIC, SHOWING THE INTENT AND GENERAL ARRANGEMENT OF EQUIPMENT AND APPURTENANCES. VERIFY CONDITIONS IN SPACES IN WHICH WORK WILL BE INSTALLED. ALL CONFLICTS SHALL BE BROUGHT TO THE ATTENTION OF THE ARCHITECT FOR CLARIFICATION.

C. ALL PIPING SHALL BE ADEQUATELY SUPPORTED TO PREVENT UNDUE VIBRATION, DEFLECTION, STRESS OR STRAIN ON ANY PIPING OR EQUIPMENT.

D. PLUMBING CONTRACTOR SHALL VERIFY LOCATION OF UTILITIES. DO NOT INSTALL ANY PIPING UNTIL LOCATION AND INVERT ELEVATIONS OF TIE-IN POINTS HAVE BEEN VERIFIED.

E. INSTALL AIR CHAMBERS OR WATER HAMMER ARRESTORS PER PDI-WH 201 REQUIREMENTS IN PIPING SYSTEM TO PREVENT NOISE AND DAMAGE DUE TO WATER HAMMER. INSTALL IN ACCESSIBLE LOCATION.

F. BRANCH PIPING SHALL HAVE ACCESSIBLE ISOLATION VALVES.

G. PROVIDE SHUT-OFF VALVES IN THE SUPPLY PIPING TO EVERY FIXTURE.

H. PROVIDE AN EFFECTIVE AIR GAP OF A MINIMUM 3" BETWEEN DRAIN OUTLET AND FLOOR DRAIN ON ALL INDIRECT DRAINS.

I. PROVIDE AND INSTALL TRAP PRIMERS ON FLOOR DRAINS WHERE INDICATED ON DRAWINGS.

J. PROVIDE AND INSTALL A BACKFLOW PREVENTION CHECK VALVE ON ALL HOSE CONNECTIONS.

K. FOR DIMENSIONAL LOCATION OF PLUMBING FIXTURES, SEE ARCHITECTURAL DRAWINGS.

L. WATER SUPPLY PIPING TO BE RUN IN CEILING SPACE UNLESS NOTED OTHERWISE.

M. OFF-SET VTR PIPING (IN CEILING OR ATTIC SPACE) AS REQUIRED TO CLEAR ANY AIR INTAKE EQUIPMENT BY MIN 12 FT AND EDGE OF ROOF BY MIN 5 FT. COORDINATE ALL VTR PIPING WITH MECHANICAL CONTRACTOR.

N. OFF-SET VTR PIPING (IN CEILING OR ATTIC SPACE) AS REQUIRED TO CLEAR ROOF FRAMING AND SUPPORTING MEMBERS.

O. DO NOT RUN WATER PIPING IN DATA OR ELECTRICAL ROOMS AND DO NOT RUN ANY PIPING OVER TOP OF ELECTRICAL PANEL BOXES. COORDINATE LOCATION OF PIPING NEAR ELECTRICAL EQUIPMENT WITH ELECTRICAL CONTRACTOR.

P. THE CONTRACTOR SHALL MAINTAIN A SET OF "AS-BUILT" DRAWINGS AT THE JOB SITE, SHOWING ANY DEVIATIONS FROM THE ORIGINAL DRAWINGS. "AS-BUILT" DRAWINGS SHALL BE TURNED OVER TO THE OWNER UPON COMPLETION OF THE PROJECT.

Q. SOIL, WASTE, AND VENT PIPING SHALL BE PVC-DWV CONFORMING TO ASTM D-2665.

R. INSTALL CLEANOUTS WHERE SHOWN ON DRAWINGS AND AS REQUIRED BY APPLICABLE CODES. CLEANOUTS SHALL TERMINATE FLUSH WITH THE FINISHED FLOOR OR WALL.

S. ALL WATER SUPPLY PIPING SHALL BE TYPE "L" HARD DRAWN COPPER TUBING WITH WROUGHT COPPER FITTINGS. PROVIDE DIELECTRIC FITTINGS WHEN JOINING OR ABUTTING DISSIMILAR METALS. INSULATE ALL DOMESTIC HOT AND COLD WATER PIPING.

WATER HAMMER ARRESTOR SCHEDULE

TAG	PDI UNITS	FIXTURE UNITS	MANUFACTURER	MODEL
WHA-A	A	1-11	ZURN	Z-1700
WHA-B	B	12-32	ZURN	Z-1700
WHA-C	C	33-60	ZURN	Z-1700
WHA-D	D	61-113	ZURN	Z-1700

LEGEND

SYMBOL	ABBR	DESCRIPTION
	SAN	SANITARY PIPING
	V	SANITARY VENT PIPING
	CW	DOMESTIC COLD WATER PIPING
	HW	DOMESTIC HOT WATER PIPING
P	P	P-TRAP PRIMER PIPING
		CAPPED END OF PIPE
	CO	FLOOR CLEANOUT
	WCO	WALL CLEANOUT
	CO	HORIZONTAL CLEANOUT
		SHUT-OFF VALVE
		SHUT-OFF VALVE & BOX
		CHECK VALVE
	FD	FLOOR DRAIN
	HB	HOSE BIBB

ABBREVIATIONS

ABBR	DESCRIPTION
AAV	AIR ADMITTANCE VALVE
AFF	ABOVE FINISHED FLOOR
ARCH	ARCHITECTURAL
ASME	AMERICAN SOCIETY OF MECHANICAL ENGINEERS
CONC	CONCRETE
CONT	CONTINUATION
DIA	DIAMETER
FFE	FINISHED FLOOR ELEVATION
FT	FEET
GAL	GALLON
IE	INVERT ELEVATION
MIN	MINIMUM
PL	PLACE
PSI	POUNDS PER SQUARE INCH
SQ	SQUARE
T&P	TEMPERATURE AND PRESSURE
THK	THICK
TYP	TYPICAL
VTR	VENT THRU ROOF
W/	WITH

LONG & ASSOCIATES
architects | engineers, inc.
4525 South Manhattan Avenue, Tampa, FL 33611-2305
T:813.839.0506 F:813.839.4616 AAC001624 IB28 CGC1511025
www.longandassociates.com

THIS DOCUMENT IS COPYRIGHTED MATERIAL AND THE CLIENT HAS AN IMPERFECT LICENSE FOR USE IN CONNECTION WITH THE EXPRESS PURPOSE OF THIS PROJECT. REPRODUCTION OF THIS DOCUMENT BY OTHERS IS PROHIBITED. ALL RIGHTS RESERVED.

HILLSBOROUGH COUNTY SHERIFF'S OFFICE

PINEBROOK BUILDING 4 INTERIOR RENOVATION

1220 - 1238 TECH BLVD.
TAMPA, FL 33619

Seal

WILLIAM E. BROWN, P.E.
PE 57975

No.	Date	Issues & Revisions

TO THE BEST OF THE ARCHITECT'S AND/OR ENGINEER'S KNOWLEDGE THESE PLANS AND SPECIFICATIONS COMPLY WITH THE APPLICABLE MINIMUM BUILDING CODES AND THE APPLICABLE FIRE-SAFETY STANDARDS

Phase: 100% CONSTRUCTION DRAWINGS
Drawn By: CB
Checked By: BB
Job No: 19002
Date: SEPTEMBER 20, 2019
9/19/2019 4:41:01 PM

GENERAL NOTES & LEGEND

P0.1

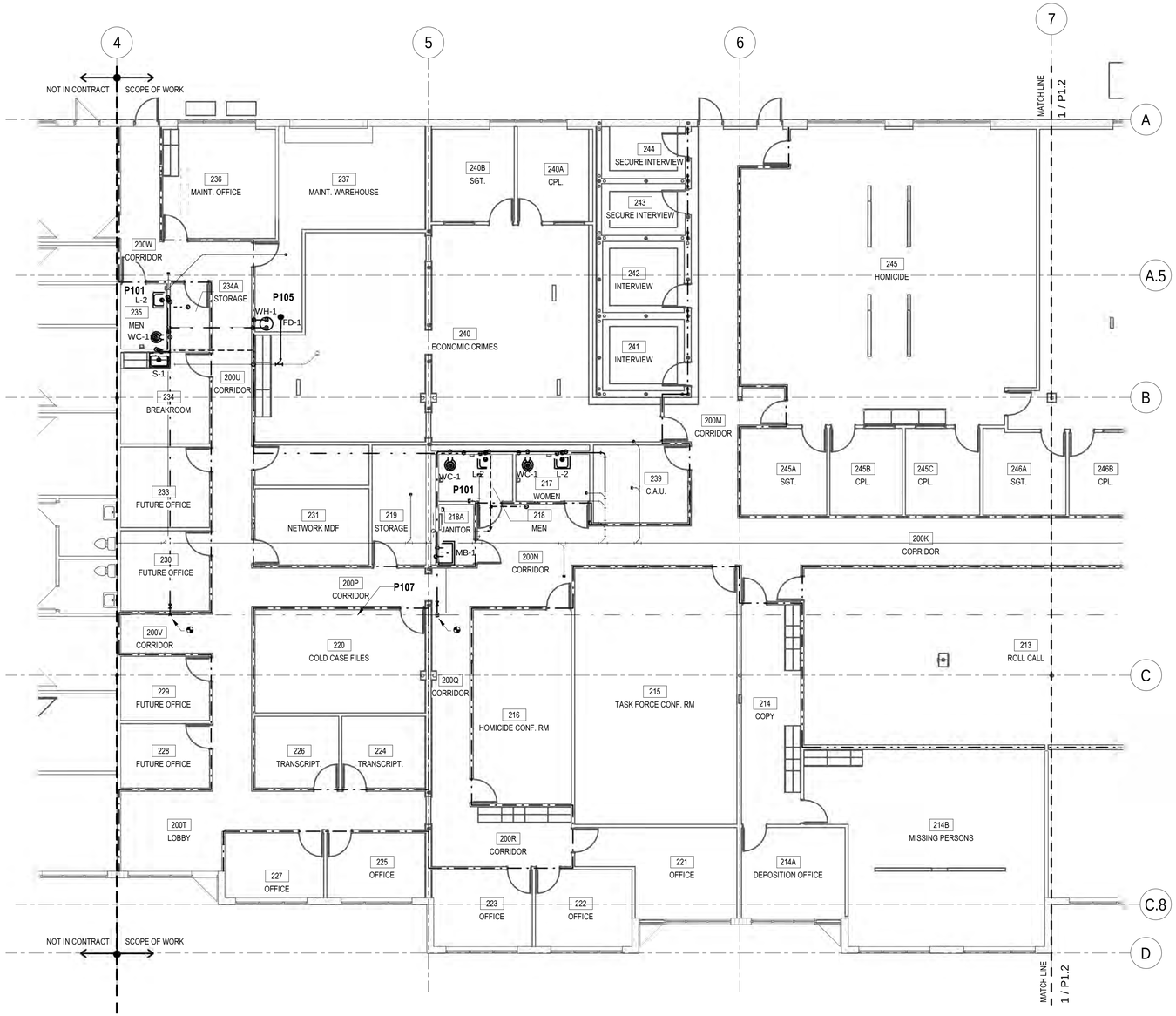

N

1 PARTIAL PLUMB PLAN

SCALE: 1/8" = 1'-0"

0' 4' 8' 16'

KEYNOTE LEGEND

NO.	DESCRIPTION
P101	PROVIDE NEW 1-1/2 IN. DOMESTIC WATER PIPE TAPPED INTO THE DOMESTIC WATER MAIN. PROVIDE SHUTOFF VALVE AT BRANCH.
P105	PROVIDE NEW 3/4 IN. DOMESTIC WATER PIPE TAPPED INTO THE DOMESTIC WATER MAIN. PROVIDE SHUTOFF VALVE AT BRANCH.
P107	EXISTING DOMESTIC PIPE ABOVE CEILING.

DRAWING KEY

1 - HR FIRE RATED WALL.

2 - HR FIRE RATED WALL.

NOTE: COORDINATE LOCATIONS AND TYPE OF FIRE-RATED WALL CONSTRUCTION AS WELL AS THROUGH-WALL PENETRATIONS WITH ARCHITECTURAL DRAWINGS.

FD: PROVIDE FIRE DAMPER IN DUCTWORK PENETRATING FIRE-RATED WALLS.

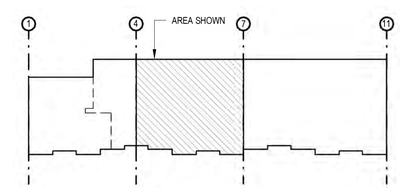

A KEY PLAN

SCALE: NTS

LONG & ASSOCIATES
architects | engineers, inc.
4525 South Manhattan Avenue, Tampa, FL 33611-2305
T:813.839.0506 F:813.839.4616 AAC0010624 IBDR CGC1511025
www.longandassociates.com

THIS DOCUMENT IS COPYRIGHTED IN A NOTE TO CLIENT, OWNERS TO USE DURING THE CONSTRUCTION PROJECT REPRODUCTIONS EXPRESSLY PROHIBITED WITHOUT THE CONSENT OF LONG & ASSOCIATES. ALL RIGHTS RESERVED

HILLSBOROUGH COUNTY SHERIFF'S OFFICE

PINEBROOK BUILDING 4 INTERIOR RENOVATION

1220 - 1238 TECH BLVD.
TAMPA, FL 33619

Seal

WILLIAM E. BROWN, P.E.
PE 57975

No.	Date	Issues & Revisions

TO THE BEST OF THE ARCHITECT'S AND/OR ENGINEER'S KNOWLEDGE THESE PLANS AND SPECIFICATIONS COMPLY WITH THE APPLICABLE MINIMUM BUILDING CODES AND THE APPLICABLE FIRE-SAFETY STANDARDS

Phase: 100% CONSTRUCTION DRAWINGS
Drawn By: CB
Checked By: BB
Job No: 19002
Date: SEPTEMBER 20, 2019
9/19/2019 4:41:04 PM

PARTIAL PLUMB PLAN

P1.1

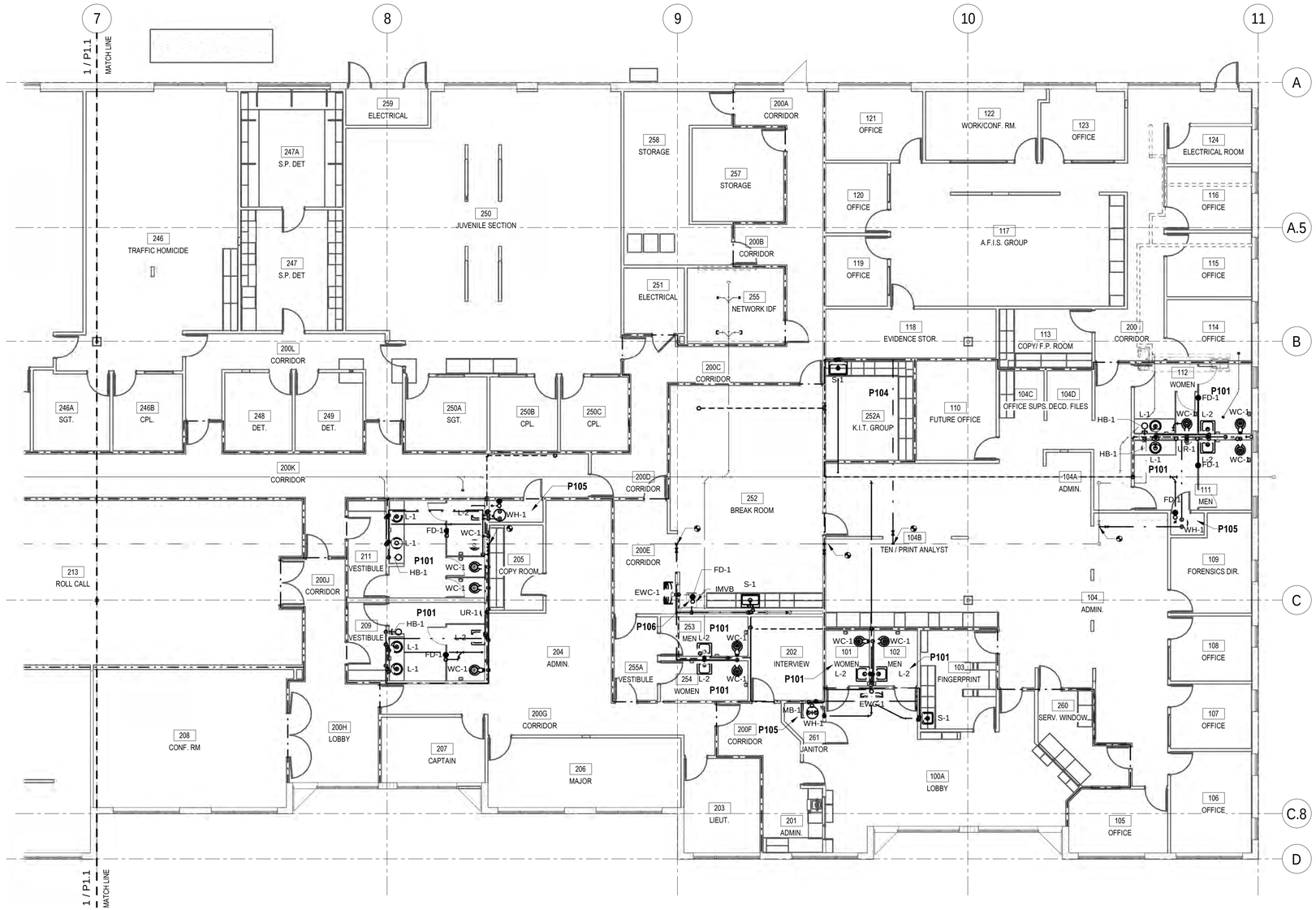

N 1 PARTIAL PLUMB PLAN

SCALE: 1/8" = 1'-0"

0' 4' 8' 16'

GENERAL NOTE: MAINTAIN DOMESTIC WATER SUPPLY TO ANY EXISTING EXTERIOR HOSE BIBBS.

KEYNOTE LEGEND

NO.	DESCRIPTION
P101	PROVIDE NEW 1-1/2 IN. DOMESTIC WATER PIPE TAPPED INTO THE DOMESTIC WATER MAIN. PROVIDE SHUTOFF VALVE AT BRANCH.
P104	PROVIDE NEW 1/2 IN. DOMESTIC WATER PIPE TAPPED INTO THE DOMESTIC WATER MAIN. PROVIDE SHUTOFF VALVE AT BRANCH.
P105	PROVIDE NEW 3/4 IN. DOMESTIC WATER PIPE TAPPED INTO THE DOMESTIC WATER MAIN. PROVIDE SHUTOFF VALVE AT BRANCH.
P106	ROUTE UNIT'S DISCHARGE LINE TO NEAREST FLOOR DRAIN. LOCATE FLOOR DRAIN UNDER ICE MACHINE.

DRAWING KEY

1 - HR FIRE RATED WALL.

2 - HR FIRE RATED WALL.

NOTE: COORDINATE LOCATIONS AND TYPE OF FIRE-RATED WALL CONSTRUCTION AS WELL AS THROUGH-WALL PENETRATIONS WITH ARCHITECTURAL DRAWINGS.

FD: PROVIDE FIRE DAMPER IN DUCTWORK PENETRATING FIRE-RATED WALLS.

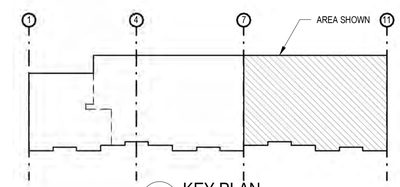

A KEY PLAN

SCALE: NTS

LONG & ASSOCIATES
architects | engineers, inc.
4525 South Manhattan Avenue, Tampa, FL 33611-2305
T:813.839.0506 F:813.839.4616 AA C001624 IBDR CGC1511025
www.longandassociates.com

THIS DOCUMENT IS COPYRIGHTED MATERIAL AND THE RIGHTS OF REPRODUCTION, DISTRIBUTION, EXHIBITION AND OTHER USES ARE RESERVED EXCLUSIVELY TO LONG & ASSOCIATES, INC. UNLESS OTHERWISE AGREED TO IN WRITING BY LONG & ASSOCIATES, INC. ©2019 LONG & ASSOCIATES, INC. ALL RIGHTS RESERVED

HILLSBOROUGH COUNTY SHERIFF'S OFFICE

PINEBROOK BUILDING 4 INTERIOR RENOVATION

1220 - 1238 TECH BLVD.
TAMPA, FL 33619

Seal

WILLIAM E. BROWN, P.E.
PE 57975

No.	Date	Issues & Revisions

TO THE BEST OF THE ARCHITECT'S AND/OR ENGINEER'S KNOWLEDGE THESE PLANS AND SPECIFICATIONS COMPLY WITH THE APPLICABLE MINIMUM BUILDING CODES AND THE APPLICABLE FIRE-SAFETY STANDARDS

Phase: 100% CONSTRUCTION DRAWINGS
Drawn By: CB
Checked By: BB
Job No: 19002
Date: SEPTEMBER 20, 2019
9/19/2019 4:41:13 PM

PARTIAL PLUMB PLAN

P1.2

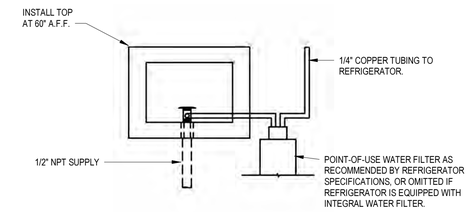

3 ICE MAKER VALVE BOX COMBO DETAIL
SCALE: NTS

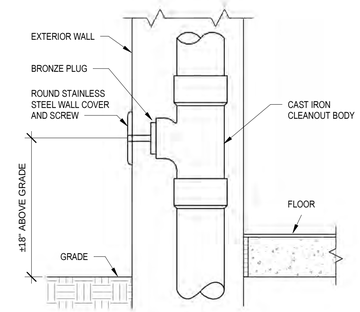

5 EXTERIOR WALL CLEANOUT DETAIL
SCALE: NTS

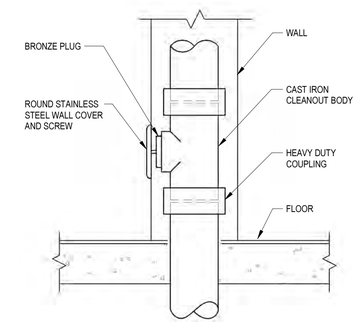

2 INTERIOR WALL CLEANOUT DETAIL
SCALE: NTS

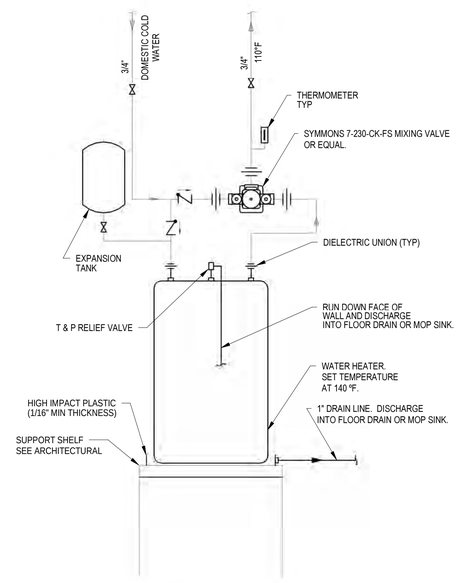

NOTE:

A. PROVIDE HEAT TRAP FITTINGS ON WATER LINES AND INSULATE HOT WATER PIPING.

4 WATER HEATER DETAIL
SCALE: NTS

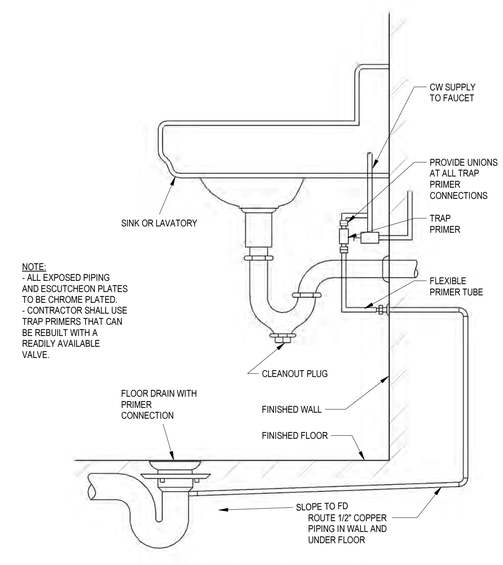

NOTE:
- ALL EXPOSED PIPING AND ESCUTCHEON PLATES TO BE CHROME PLATED.
- CONTRACTOR SHALL USE TRAP PRIMERS THAT CAN BE REBUILT WITH A READILY AVAILABLE VALVE.

1 TRAP PRIMER DETAIL
SCALE: NTS

LONG & ASSOCIATES
architects | engineers, inc.
4525 South Manhattan Avenue, Tampa, FL 33611-2305
T:813.839.0506 F:813.839.4616 AA C001624 IB28 CGC1511025
www.longandassociates.com

THIS DOCUMENT IS COPYRIGHTED MATERIAL AND PROPERTY OF LONG & ASSOCIATES. USE OR REPRODUCTION WITHOUT THE EXPRESS WRITTEN CONSENT OF LONG & ASSOCIATES IS PROHIBITED. ALL RIGHTS RESERVED.

HILLSBOROUGH COUNTY SHERIFF'S OFFICE

PINEBROOK BUILDING 4 INTERIOR RENOVATION

1220 - 1238 TECH BLVD.
TAMPA, FL 33619

Seal

WILLIAM E. BROWN, P.E.
PE 57975

No.	Date	Issues & Revisions

TO THE BEST OF THE ARCHITECT'S AND/OR ENGINEER'S KNOWLEDGE THESE PLANS AND SPECIFICATIONS COMPLY WITH THE APPLICABLE MINIMUM BUILDING CODES AND THE APPLICABLE FIRE-SAFETY STANDARDS

Phase:	100% CONSTRUCTION DRAWINGS
Drawn By:	AA
Checked By:	BB
Job No:	19002
Date:	SEPTEMBER 20, 2019

9/19/2019 4:41:15 PM

DETAILS

P3.1

PLUMBING FIXTURE SCHEDULE

FIXTURE	APPLICATION	DESCRIPTION	ACCEPTABLE MANUFACTURERS	PIPE SIZE WASTE	PIPE SIZE CW	PIPE SIZE HW	REMARKS
WATER CLOSET WC-1	HANDICAPPED FLOOR MOUNTED	BOWL: WHITE, FLOOR MOUNTED WITH BOTTOM OUTLET, VITREOUS CHINA, SIPHON JET, ELONGATED BOWL, 17" AFF TO RIM , BOLT CAPS WITH CAULK. 1.1 TO 1.6 GPF. BOWL AND SEAT DIMENSIONS MUST MATCH WITHIN 1/4".	SLOAN ST-2029 AMERICAN STANDARD MADERA KOHLER	4"	1"	-	
		TOILET SEAT: WHITE SOLID PLASTIC, HEAVY DUTY, ELONGATED, OPEN FRONT (WITHOUT COVER), STAINLESS STEEL SELF-SUSTAINING CHECK HINGES, INTEGRAL MOLDING BUMPERS.	BEMIS AMERICAN STANDARD CENTO CO.				
		FLUSH VALVE ASSEMBLY: BATTERY POWERED FLUSH VALVE. (1.6 GALLON FLUSH), 1" INLET, 1-1/2" OUTLET, INTEGRAL VACUUM BREAKER, SWEAT SOLDER ADAPTER, FIXED METERING BYPASS, ROUGH-IN DIMENSION MUST ALLOW FOR FLUSH VALVE CLEARANCE OF HANDICAPPED GRAB BAR WHERE APPLICABLE, OR OFFSET MAY BE REQUIRED.	SLOAN G2-8111				
URINAL UR-1	WALL HUNG	BOWL: WHITE, WALL HUNG VITREOUS CHINA, TOP SPUD, 24" TO LIP. FLOOR MOUNTED CARRIER WITH CONCEALED BACK. LOW CONSUMPTION FLUSH (0.125 GPF). 304 STAINLESS STEEL BOLTS AND WASHERS.	SLOAN SU-1009 AMERICAN STANDARD WATTS	2"	3/4"	-	SEE ARCHITECTURAL SHEETS FOR MOUNTING HEIGHT.
		FLUSH VALVE ASSEMBLY: PROVIDE MANUAL (0.125 GALLONS FLUSH) ADA COMPLIANT. CHROME FINISH COVER PLATE. 3/4" INLET ANGLE STOP WITH INTEGRAL BACKFLOW PREVENTOR, SWEAT SOLDER KIT AND WALL BRACKET.	SLOAN ROYAL 186-0.125 ZURN ROYAL				
FLOOR DRAIN FD-1	TOILET ROOMS JANITOR TRAINING	FLOOR DRAIN COATED CAST IRON BODY WITH REVERSIBLE FLASHING CAP. SEDIMENT BUCKET, 6" NICKEL BRONZE STRAINER. PROVIDE WITH TRAP PRIMER.	JAY R. SMITH 2005 03-A06NB-G-B JONESPEC JOSAM COMPANY WATTS REGULATOR CO. ZURN	3"	-	-	
SINK S-1	SINGLE BOWL ADA	SINK: COUNTER MOUNTED, SINGLE COMPARTMENT, STAINLESS STEEL, 18 GAUGE, BOWL DIMENSIONS 21x16, STAINLESS STEEL STRAINER BASKET, 1 1/2" O.D. STAINLESS STEEL TAILPIECE, 4" LONG	ELKAY LRAD2521	1 1/2"	1/2"	1/2"	
		TRIM: WRISTBLADE HANDLES, 8" GOOSENECK, SWING ARM, 4" CENTERS.	AMERICAN STANDARD 6409.170				
		SUPPLY: ANGLE STOP, 1/2 " I.P.S., LOOSE KEY, CHROME PLATED NIPPLES, ESCUTCHEON, 12" X 3/8" O.D. FLEX RISER.	CHICAGO 1017 MCGUIRE H2165LKC ZURN HLSD090LK				
		P-TRAP: CHROME PLATED, CAST BRASS, ONE-PIECE CLEANOUT PLUG, OUTLET TRAPPED FOR I.P. NIPPLE AND CAST BRASS FLANGE, POLISHED CHROME PLATED THREADED BOTH ENDS.	MCGUIRE 8912 ZURN Z-8701				
SINK S-2	DOUBLE BOWL UTILITY SINK	SINK: FREE STANDING, TWO COMPARTMENT, 14 GAUGE, 304 SS, 18 X 24 X 14 BOWLS, 4 LEGS WITH BRACING, BASKET STRAINER.	ADVANCE TABCO 94-62-36 OR EQUAL	1 1/2"	1/2"	1/2"	
		TRIM: HEAVY DUTY CHROME PLATED, 14" SWING SPOUT	ADVANCE TABCO K-105 OR EQUAL				
		SUPPLY: TWO REQUIRED, CHROME PLATED, LOOSE KEY ANGLE VALVE, WALL ESCUTCHEON, FLEXIBLE TUBE RISER.	MCGUIRE 2165CCLK				
		P-TRAP: CHROME PLATED CAST BRASS WITH CLEANOUT COMBINED WASTE LINE					
LAVATORY L-1	HANDICAPPED HOT & COLD WATER	LAVATORY: WHITE, UNDERMOUNT, VITREOUS CHINA, 15 1/2" ROUND BOWL SIZE, 4 3/8" DEPTH (ADA COMPLIANT).	AMERICAN STANDARD 0630.000	1 1/4"	1/2"	1/2"	SEE ARCHITECTURAL SHEETS FOR MOUNTING HEIGHT.
		TRIM: MANUAL, WRIST BLADE, POLISHED CHROME FINISH, 0.5 GPM SPRAY, 4" CENTERS	ZURN Z81104-XL-3M				
		SUPPLY: ONE REQUIRED, CHROME PLATED, LOOSE KEY ANGLE VALVE, WALL ESCUTCHEON, FLEXIBLE TUBE RISER, 3/8" OULTET CONNECTION.	MCGUIRE 165CCLK				
		TRAP: CHROME PLATED CAST BRASS WITH CLEANOUT, 17 GAUGE SEAMLESS TUBULAR WALL BEND, CAST BRASS SLIP NUTS, RUBBER WASHER, STEEL WALL FLANGE WITH SET SCREW, 1 1/4" O.D. P-TRAP AND ANGLE VALVE ASSEMBLIES SHALL BE INSULATED WITH MOLDED SEAMLESS ANTI MICROBIAL MATERIAL. MINIMUM 3/16" THICKNESS, COLOR WHITE.	MCGUIRE 8872 ZURN Z8700 MCGUIRE PW 2000 WC TRUEBRO OR EQUAL				
LAVATORY L-2	HANDICAPPED HOT & COLD WATER	LAVATORY: WHITE, WALL MOUNTED, VITREOUS CHINA, 4" CENTERS, 20" X 18" BOWL SIZE, 7" DEPTH (ADA COMPLIANT). PROVIDE FLOOR MOUNTED WALL CARRIER WITH CONCEALED ARMS	AMERICAN STANDARD 0355.012	1 1/4"	1/2"	1/2"	SEE ARCHITECTURAL SHEETS FOR MOUNTING HEIGHT.
		TRIM: MANUAL, WRIST BLADE, POLISHED CHROME FINISH, 0.5 GPM SPRAY, 4" CENTERS	ZURN Z81104-XL-3M				
		SUPPLY: 2-ANGLE STOPS (1/2" I.P.S.) LOOSE KEY, C.P. NIPPLES, ESCUTCHEONS, 12" X 3/8" FLEX RISER.	CHICAGO 1017 MCGUIRE H2165LKC ZURN ZH-8822-LR-LK-HCI				
		TRAP: CHROME PLATED CAST BRASS WITH CLEANOUT, 17 GAUGE SEAMLESS TUBULAR WALL BEND, CAST BRASS SLIP NUTS, RUBBER WASHER, STEEL WALL FLANGE WITH SET SCREW, 1 1/4" O.D.	MCGUIRE 8872 ZURN				

FIXTURE	APPLICATION	DESCRIPTION	ACCEPTABLE MANUFACTURERS	PIPE SIZE WASTE	PIPE SIZE CW	PIPE SIZE HW	REMARKS
ICE MAKER VALVE BOX IMVB	COLD WATER	ICE MAKER VALVE BOX: 1/2" O.D. SWEAT COMBO CONNECTION, 1/4" O.D. COMPRESSION OUTLET, 11.63" X 9.50" OVERALL DIMENSION, 20 GA. STEEL BOX, REFER TO MANUFACTURERS RECOMMENDATIONS FOR ROUGH IN REQUIREMENTS. PROVIDE FLEXIBLE TUBING FROM VALVE TO ICE MAKER. INSTALL 5'-0" A.F.F. DIRECTLY BEHIND REFRIGERATOR.	GUY GREY BIM875 OR APPROVED EQUAL	-	1/2"	-	
ELECTRIC WATER COOLER EWC-1	HANDICAPPED	BI-LEVEL ELECTRIC WATER COOLER WITH BOTTLE FILL: SELF-CONTAINED, WALL HUNG, BI-LEVEL, NON-FILTERED ELECTRIC WATER COOLER, WHEELCHAIR ACCESS MODEL, STAINLESS STEEL CONSTRUCTION WITH PUSHBAR ACTIVATION, LEAD-FREE. 8 GPH OF 50°F DRINKING WATER AT 90°F AMBIENT. 7.0 AMPS AT 115V / 1 ø / 60HZ. 1-1/2" PLASTIC P-TRAP W/CLEANOUT. 1/2" STOP. REQUIRES OUTLET FOR POWER CORD.	ELKAY EZSTLG8WSLK HALSEY TAYLOR HAWS	1 1/2"	1/2"	-	SEE ARCHITECTURAL SHEETS FOR MOUNTING HEIGHT.
ELECTRIC WATER COOLER EWC-2	HANDICAPPED	ELECTRIC WATER COOLER: SELF-CONTAINED, WALL HUNG, SINGLE LEVEL, NON-FILTERED ELECTRIC WATER COOLER, WHEELCHAIR ACCESS MODEL, STAINLESS STEEL CONSTRUCTION WITH PUSHBAR ACTIVATION, LEAD-FREE. 8 GPH OF 50°F DRINKING WATER AT 90°F AMBIENT. 5.0 AMPS AT 115V / 1 ø / 60HZ. 1-1/4" PLASTIC P-TRAP W/CLEANOUT. 1/2" STOP. REQUIRES OUTLET FOR POWER CORD.	ELKAY EZS8S HALSEY TAYLOR HAWS	1 1/4"	1/2"	-	SEE ARCHITECTURAL SHEETS FOR MOUNTING HEIGHT.
HOSE BIBB HB-1	INTERIOR	HOSE BIBB: 3/4" INLET, 3/4" HOSE THREAD OUTLET, LOOSE TEE KEY, ROUGH CHROME PLATED, WITH LOOSE KEY HANDLE, PROVIDE WITH VACUUM BREAKER.	WOODFORD MANUFACTURING CO - 24 JONESPEC PLUMBING PRODUCTS JOSAM COMPANY JAY R. SMITH MANUFACTURING CO	-	3/4"	-	SEE ARCHITECTURAL SHEETS FOR MOUNTING HEIGHT.
MOP BASIN MB-1	JANITOR	MOP BASIN: PLASTIC, ONE PIECE HOMOGENOUS 24"x24" WITH 10" SIDES, 1" SHOULDERS, FACTORY INSTALLED STAINLESS STEEL DRAIN WITH DOME STRAINER AND LINT BASKET.	FIAT MSBID2424 STERN-WILLIAMS ZURN	3"	3/4"	3/4"	
		FAUCET: ADJUSTABLE WALL MOUNTED, SOLID CAST BRASS BODY, 1/4 TURN CERAMIC DISC, 5 GPM, BRASS LEVER HANDLES, VACUUM BREAKER, INTEGRAL STOPS, TOP BRACE AND HOSE END.	AMERICAN STANDARD 8344.012.002 DELTA GERBER KOHLER				
		STAINLESS STEEL WALL GUARDS:	FIAT MSG2424 STERN-WILLIAMS JONESPEC PLUMBING PRODUCTS				
		HOSE AND BRACKET: 30" LONG FLEXIBLE, HEAVY DUTY 5/8" RUBBER HOSE. CLOTH REINFORCED WITH 3/4" CHROME COUPLING AT ONE END. BRACKET IS 5" LONG x 3" WIDE, STAINLESS STEEL WITH RUBBER GRIP.	FIAT PRODUCTS NO. 832-AA JONESPEC PLUMBING PRODUCTS STERN-WILLIAMS CO				

WATER HEATER SCHEDULE

DESIGNATION	DESCRIPTION	MANUFACTURER/MODEL
WH-1	20 GALLON CAPACITY 4.5 KW, 208/1/60 SET TEMPERATURE AT 140 DEGREES F, SET MIXING VALVE TO 110 DEGREES F PROVIDE SYMMONS 7-230-CK-FS MIXING VALVE OR EQUAL.	AO SMITH / DEL-20

LONG & ASSOCIATES
architects | engineers, inc.
4525 South Manhattan Avenue, Tampa, FL 33611-2305
T:813.839.0506 F:813.839.4616 AAC001424 IBDB CGC1511025
www.longandassociates.com

THIS DOCUMENT IS COPYRIGHTED IN THE UNITED STATES OF AMERICA AND THROUGHOUT THE WORLD UNDER THE COPYRIGHT LAWS OF THE UNITED STATES. LONG & ASSOCIATES RESERVES ALL RIGHTS REGARDING REPRODUCTION AND DISTRIBUTION.

HILLSBOROUGH COUNTY SHERIFF'S OFFICE

PINEBROOK BUILDING 4 INTERIOR RENOVATION

1220 - 1238 TECH BLVD.
TAMPA, FL 33619

Seal

WILLIAM E. BROWN, P.E.
PE 57975

No.	Date	Issues & Revisions

TO THE BEST OF THE ARCHITECT'S AND/OR ENGINEER'S KNOWLEDGE THESE PLANS AND SPECIFICATIONS COMPLY WITH THE APPLICABLE MINIMUM BUILDING CODES AND THE APPLICABLE FIRE-SAFETY STANDARDS

Phase: 100% CONSTRUCTION DRAWINGS
Drawn By: CB
Checked By: BB
Job No: 19002
Date: SEPTEMBER 20, 2019
9/19/2019 4:41:18 PM

SCHEDULES

P3.2

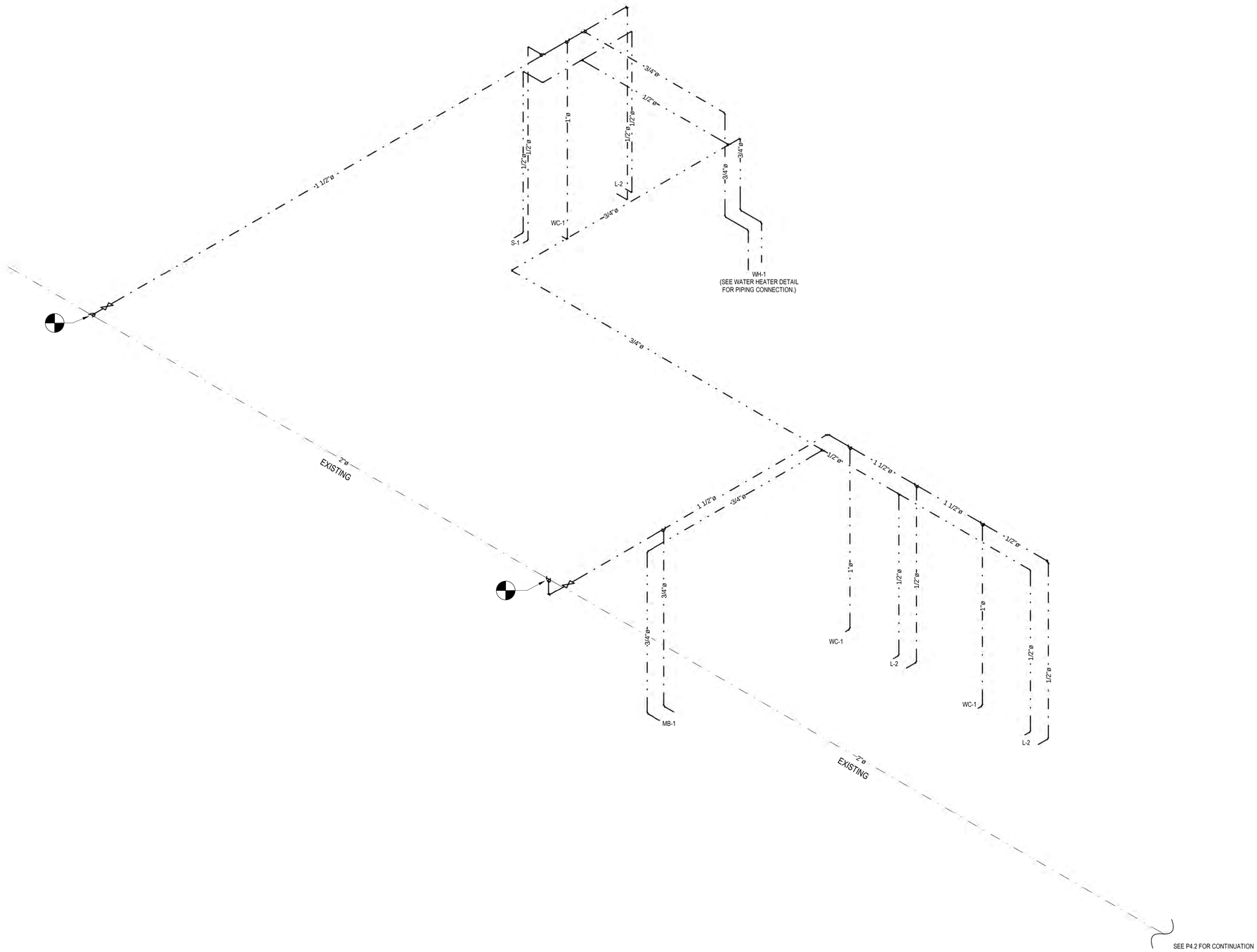

1 PARTIAL DOMESTIC RISER DIAGRAM
SCALE: NTS

LONG & ASSOCIATES
architects | engineers, inc.
4525 South Manhattan Avenue, Tampa, FL 33611-2305
T:813.839.0506 F:813.839.4616 AAC001624 IBPR CGC1511025
www.longandassociates.com

THIS DOCUMENT IS COPYRIGHTED & IS THE PROPERTY OF LONG & ASSOCIATES. USE FOR CONSTRUCTION WITHOUT WRITTEN EXPRESS PERMISSION IS PROHIBITED. ALL RIGHTS RESERVED.

HILLSBOROUGH COUNTY SHERIFF'S OFFICE

PINEBROOK BUILDING 4 INTERIOR RENOVATION

1220 - 1238 TECH BLVD.
TAMPA, FL 33619

Seal

WILLIAM E. BROWN, P.E.
PE 57975

No.	Date	Issues & Revisions

TO THE BEST OF THE ARCHITECT'S AND/OR ENGINEER'S KNOWLEDGE THESE PLANS AND SPECIFICATIONS COMPLY WITH THE APPLICABLE MINIMUM BUILDING CODES AND THE APPLICABLE FIRE-SAFETY STANDARDS

Phase: 100% CONSTRUCTION DRAWINGS
Drawn By: RA
Checked By: BB
Job No: 19002
Date: SEPTEMBER 20, 2019
9/19/2019 4:41:20 PM

PARTIAL DOMESTIC RISER DIAGRAM

P4.1

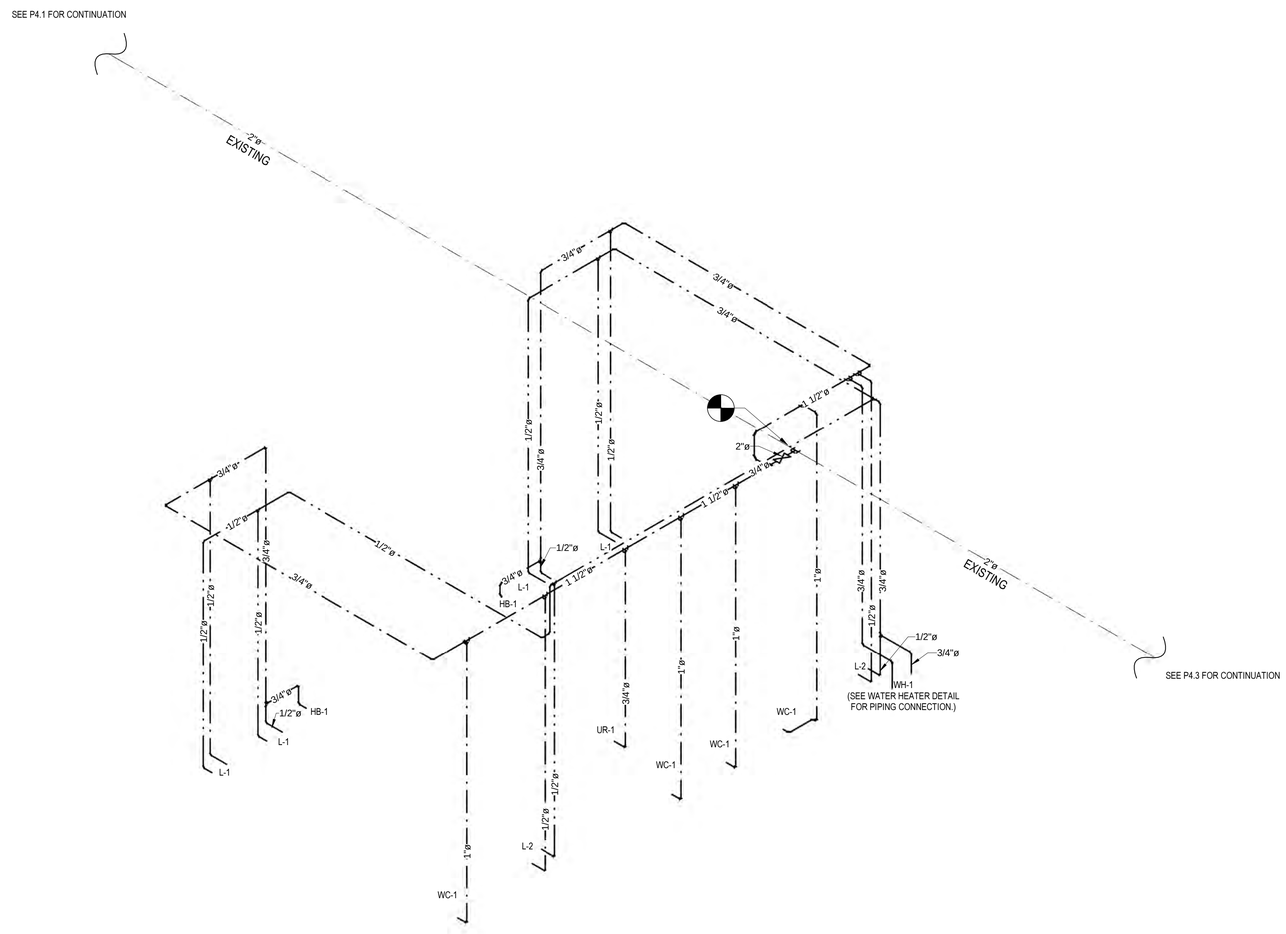

1 PARTIAL DOMESTIC RISER DIAGRAM
SCALE: NTS

LONG & ASSOCIATES
architects | engineers, inc.
4525 South Manhattan Avenue, Tampa, FL 33611-2305
T:813.839.0506 F:813.839.4616 AAC0010424 IBPE CGC1511025
www.longandassociates.com

THIS DOCUMENT IS COPYRIGHTED MATERIAL & ARCHITECTURAL WORK PROTECTED BY COPYRIGHT LAW. REPRODUCTION OR DISTRIBUTION WITHOUT WRITTEN CONSENT OF LONG & ASSOCIATES IS PROHIBITED. ALL RIGHTS RESERVED.

HILLSBOROUGH COUNTY SHERIFF'S OFFICE

PINEBROOK BUILDING 4 INTERIOR RENOVATION

1220 - 1238 TECH BLVD.
TAMPA, FL 33619

Seal

WILLIAM E. BROWN, P.E.
PE 57975

No.	Date	Issues & Revisions

TO THE BEST OF THE ARCHITECT'S AND/OR ENGINEER'S KNOWLEDGE THESE PLANS AND SPECIFICATIONS COMPLY WITH THE APPLICABLE MINIMUM BUILDING CODES AND THE APPLICABLE FIRE-SAFETY STANDARDS

Phase:	100% CONSTRUCTION DRAWINGS
Drawn By:	RA
Checked By:	BB
Job No:	19002
Date:	SEPTEMBER 20, 2019

9/19/2019 4:41:24 PM

PARTIAL DOMESTIC RISER DIAGRAM

P4.2

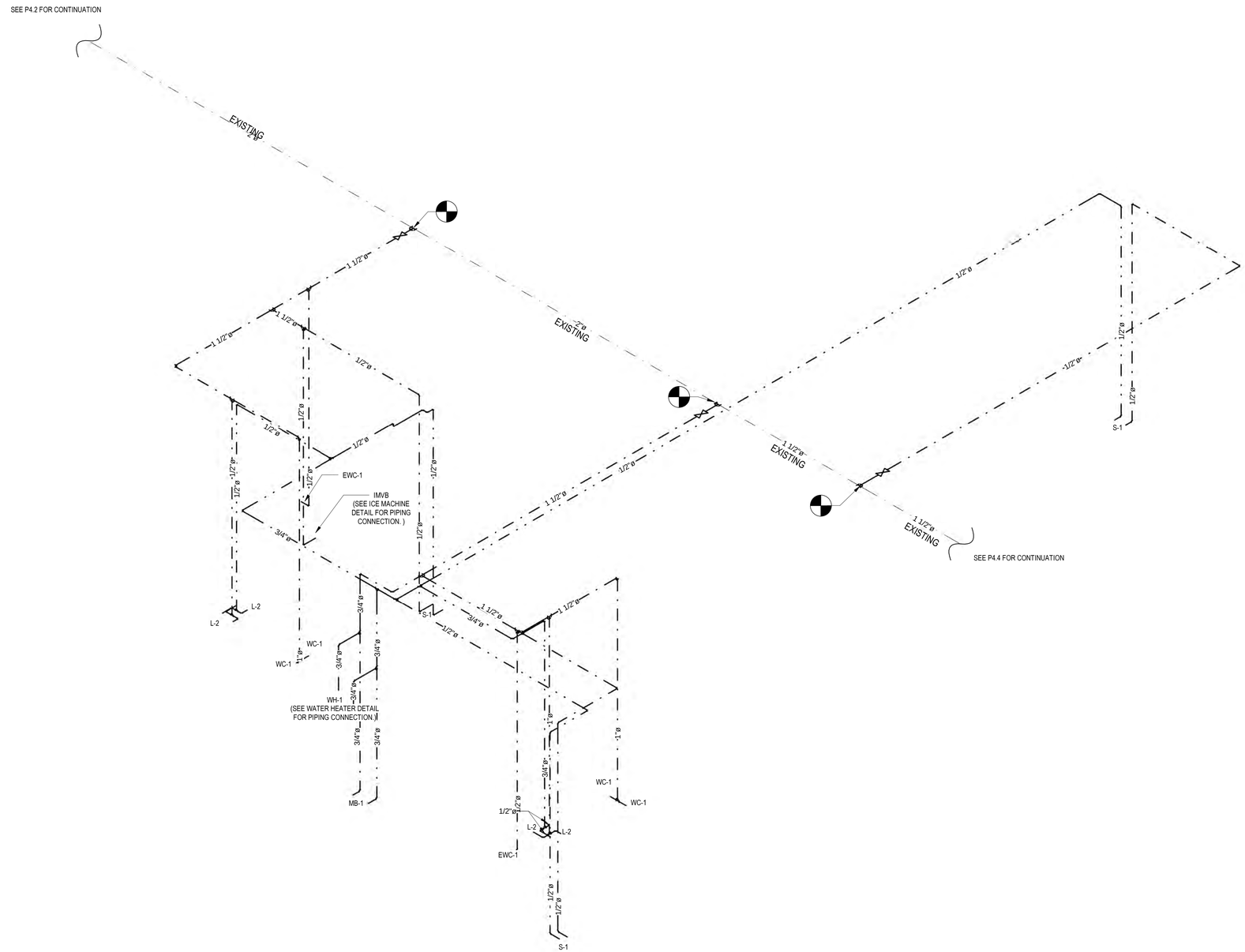

1 PARTIAL DOMESTIC RISER DIAGRAM
SCALE: NTS

LONG & ASSOCIATES
architects | engineers, inc.
4525 South Manhattan Avenue, Tampa, FL 33611-2305
T:813.839.0506 F:813.839.4616 AAC001624 IBPE CGC1511025
www.longandassociates.com

THIS DOCUMENT IS COPYRIGHTED MATERIAL & MUST NOT BE COPIED, SHARED, REPRODUCED OR DISTRIBUTED WITHOUT PRIOR EXPRESS WRITTEN CONSENT OF LONG & ASSOCIATES. ALL RIGHTS RESERVED.

HILLSBOROUGH COUNTY SHERIFF'S OFFICE

PINEBROOK BUILDING 4 INTERIOR RENOVATION

1220 - 1238 TECH BLVD.
TAMPA, FL 33619

Seal

WILLIAM E. BROWN, P.E.
PE 57975

No.	Date	Issues & Revisions

TO THE BEST OF THE ARCHITECT'S AND/OR ENGINEER'S KNOWLEDGE THESE PLANS AND SPECIFICATIONS COMPLY WITH THE APPLICABLE MINIMUM BUILDING CODES AND THE APPLICABLE FIRE-SAFETY STANDARDS

Phase: 100% CONSTRUCTION DRAWINGS
Drawn By: RA
Checked By: BB
Job No: 19002
Date: SEPTEMBER 20, 2019
9/19/2019 4:41:26 PM

PARTIAL DOMESTIC RISER DIAGRAM

P4.3

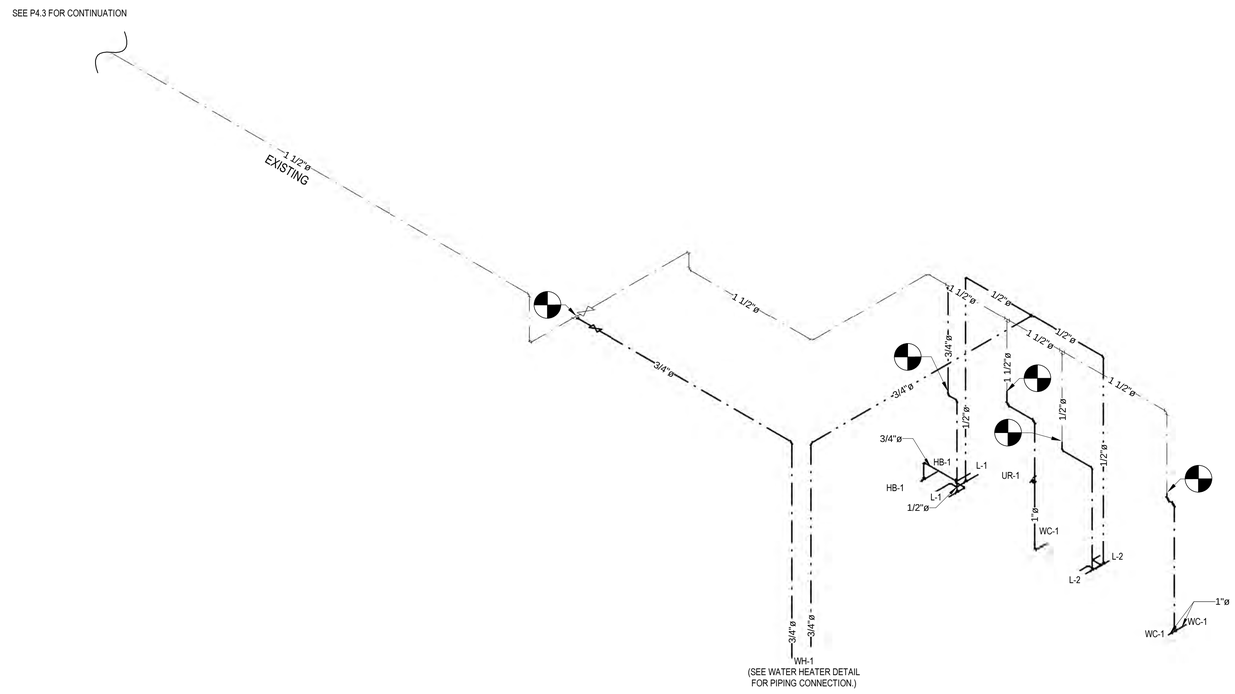

1 PARTIAL DOMESTIC RISER DIAGRAM
SCALE: NTS

LONG & ASSOCIATES
architects | engineers, inc.
4525 South Manhattan Avenue, Tampa, FL 33611-2305
T:813.839.0506 F:813.839.4616 AAC001624 IB28 CGC1511025
www.longandassociates.com

THIS DOCUMENT IS COPYRIGHT PROTECTED LANDMARK ARCHITECTS OF LONG & ASSOCIATES, INC. ARCHITECTS
REPRODUCTION OR DISTRIBUTION WITHOUT EXPRESS WRITTEN CONSENT OF LONG & ASSOCIATES IS PROHIBITED. ALL RIGHTS RESERVED

HILLSBOROUGH COUNTY SHERIFF'S OFFICE

PINEBROOK BUILDING 4 INTERIOR RENOVATION

1220 - 1238 TECH BLVD.
TAMPA, FL 33619

Seal

WILLIAM E. BROWN, P.E.
PE 57975

No.	Date	Issues & Revisions

TO THE BEST OF THE ARCHITECT'S AND/OR ENGINEER'S KNOWLEDGE THESE PLANS AND SPECIFICATIONS COMPLY WITH THE APPLICABLE MINIMUM BUILDING CODES AND THE APPLICABLE FIRE-SAFETY STANDARDS

Phase: 100% CONSTRUCTION DRAWINGS
Drawn By: RA
Checked By: BB
Job No: 19002
Date: SEPTEMBER 20, 2019
9/19/2019 4:41:29 PM

PARTIAL DOMESTIC RISER DIAGRAM

P4.4

KEYNOTE LEGEND	
NO.	DESCRIPTION
P103	CAP SANITARY BELOW SLAB. PATCH TO MATCH EXISTING. (TYP.)

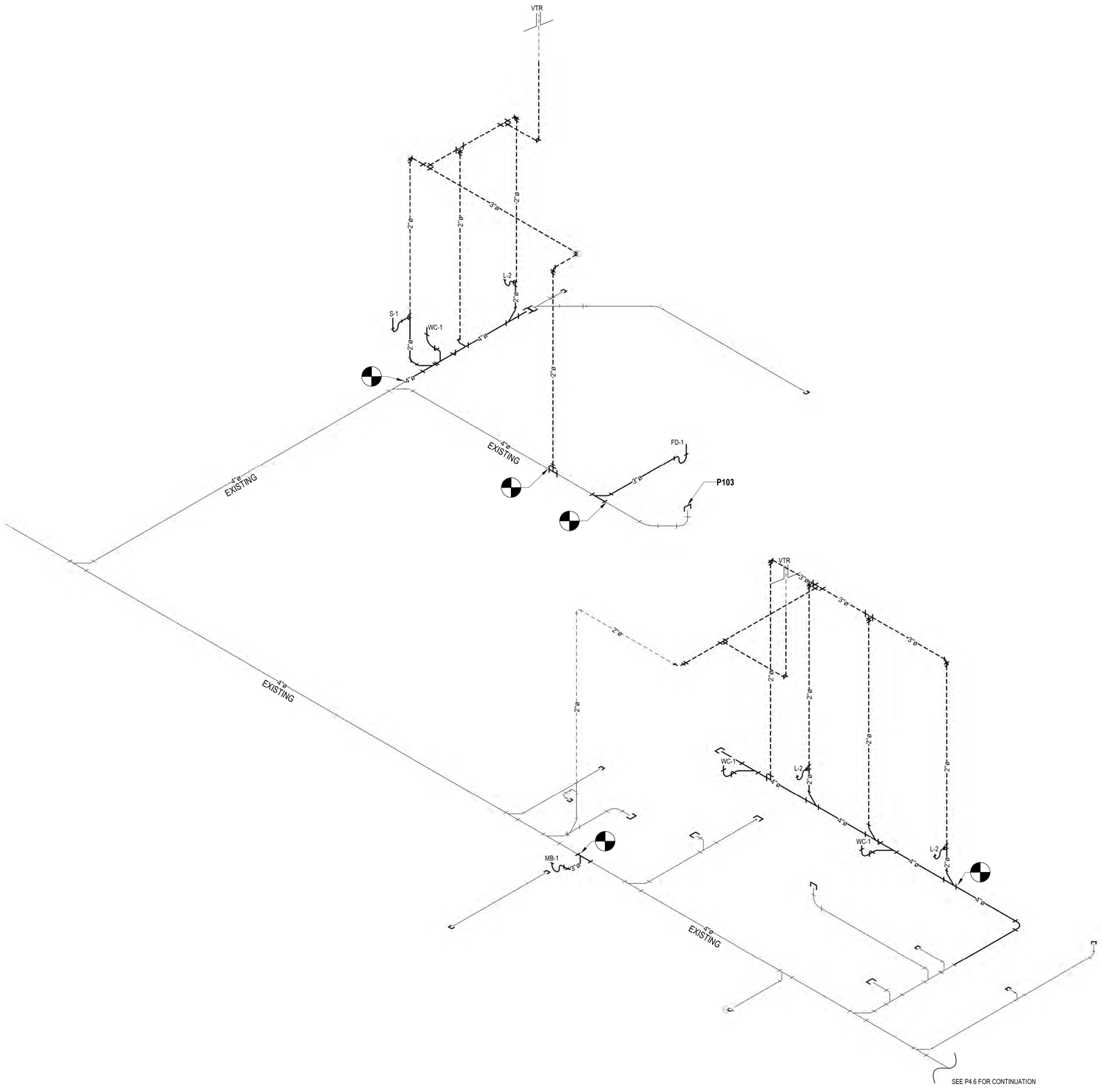

1 PARTIAL SANITARY RISER DIAGRAM
SCALE: NTS

LONG & ASSOCIATES
architects | engineers, inc.
4525 South Manhattan Avenue, Tampa, FL 33611-2305
T:813.839.0206 F:813.839.4616 AAC001624 IB28 CGC1511025
www.longandassociates.com

THIS DOCUMENT IS COPYRIGHTED MATERIAL & AN INSTRUCTIONAL TOOL. OWNERSHIP IS RETAINED BY LONG & ASSOCIATES. REPRODUCTION OR DISTRIBUTION WITHOUT THE EXPRESS WRITTEN CONSENT OF LONG & ASSOCIATES IS PROHIBITED. ALL RIGHTS RESERVED.

HILLSBOROUGH COUNTY SHERIFF'S OFFICE

PINEBROOK BUILDING 4 INTERIOR RENOVATION

1220 - 1238 TECH BLVD.
TAMPA, FL 33619

Seal

WILLIAM E. BROWN, P.E.
PE 57975

No.	Date	Issues & Revisions

TO THE BEST OF THE ARCHITECT'S AND/OR ENGINEER'S KNOWLEDGE THESE PLANS AND SPECIFICATIONS COMPLY WITH THE APPLICABLE MINIMUM BUILDING CODES AND THE APPLICABLE FIRE-SAFETY STANDARDS

Phase:	100% CONSTRUCTION DRAWINGS
Drawn By:	RA
Checked By:	BB
Job No:	19002
Date:	SEPTEMBER 20, 2019

9/19/2019 4:41:34 PM

PARTIAL SANITARY RISER DIAGRAM

P4.5

KEYNOTE LEGEND	
NO.	DESCRIPTION
P103	CAP SANITARY BELOW SLAB. PATCH TO MATCH EXISTING. (TYP.)

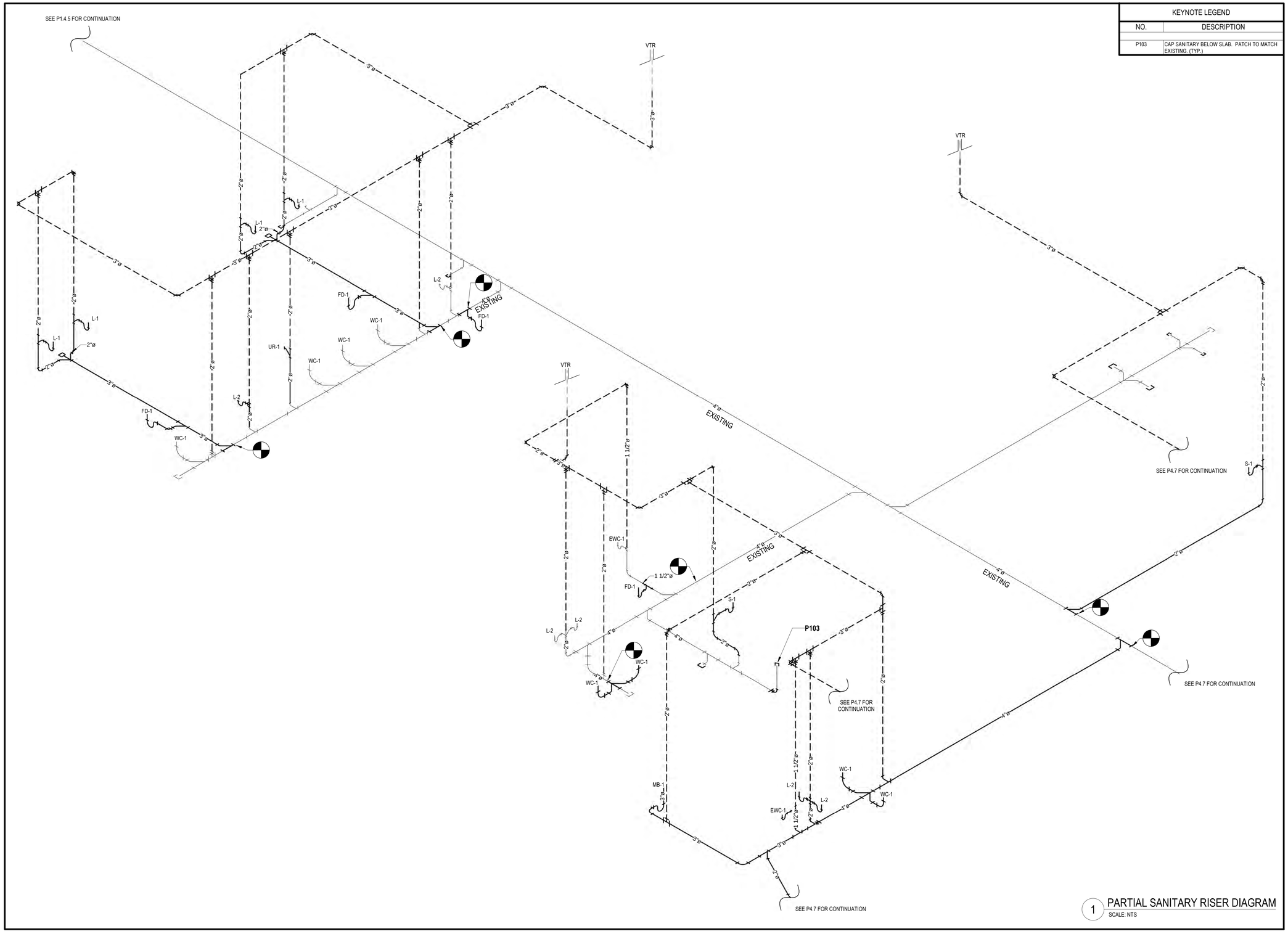

1 PARTIAL SANITARY RISER DIAGRAM
SCALE: NTS

LONG & ASSOCIATES
architects | engineers, inc.
4525 South Manhattan Avenue, Tampa, FL 33611-2305
T:813.839.0506 F:813.839.4616 AAC001624 IIBB CGC1511025
www.longandassociates.com

THIS DOCUMENT IS COPYRIGHTED MATERIAL AND PROPERTY OF LONG & ASSOCIATES. USE OR REPRODUCTION WITHOUT THE EXPRESS WRITTEN CONSENT OF LONG & ASSOCIATES IS PROHIBITED. ALL RIGHTS RESERVED.

HILLSBOROUGH COUNTY SHERIFF'S OFFICE

PINEBROOK BUILDING 4 INTERIOR RENOVATION

1220 - 1238 TECH BLVD.
TAMPA, FL 33619

Seal

WILLIAM E. BROWN, P.E.
PE 57975

No.	Date	Issues & Revisions

TO THE BEST OF THE ARCHITECT'S AND/OR ENGINEER'S KNOWLEDGE THESE PLANS AND SPECIFICATIONS COMPLY WITH THE APPLICABLE MINIMUM BUILDING CODES AND THE APPLICABLE FIRE-SAFETY STANDARDS

Phase:	100% CONSTRUCTION DRAWINGS
Drawn By:	RA
Checked By:	BB
Job No:	19002
Date:	SEPTEMBER 20, 2019

9/19/2019 4:41:39 PM

PARTIAL SANITARY RISER DIAGRAM

P4.6

KEYNOTE LEGEND	
NO.	DESCRIPTION
P103	CAP SANITARY BELOW SLAB. PATCH TO MATCH EXISTING. (TYP.)

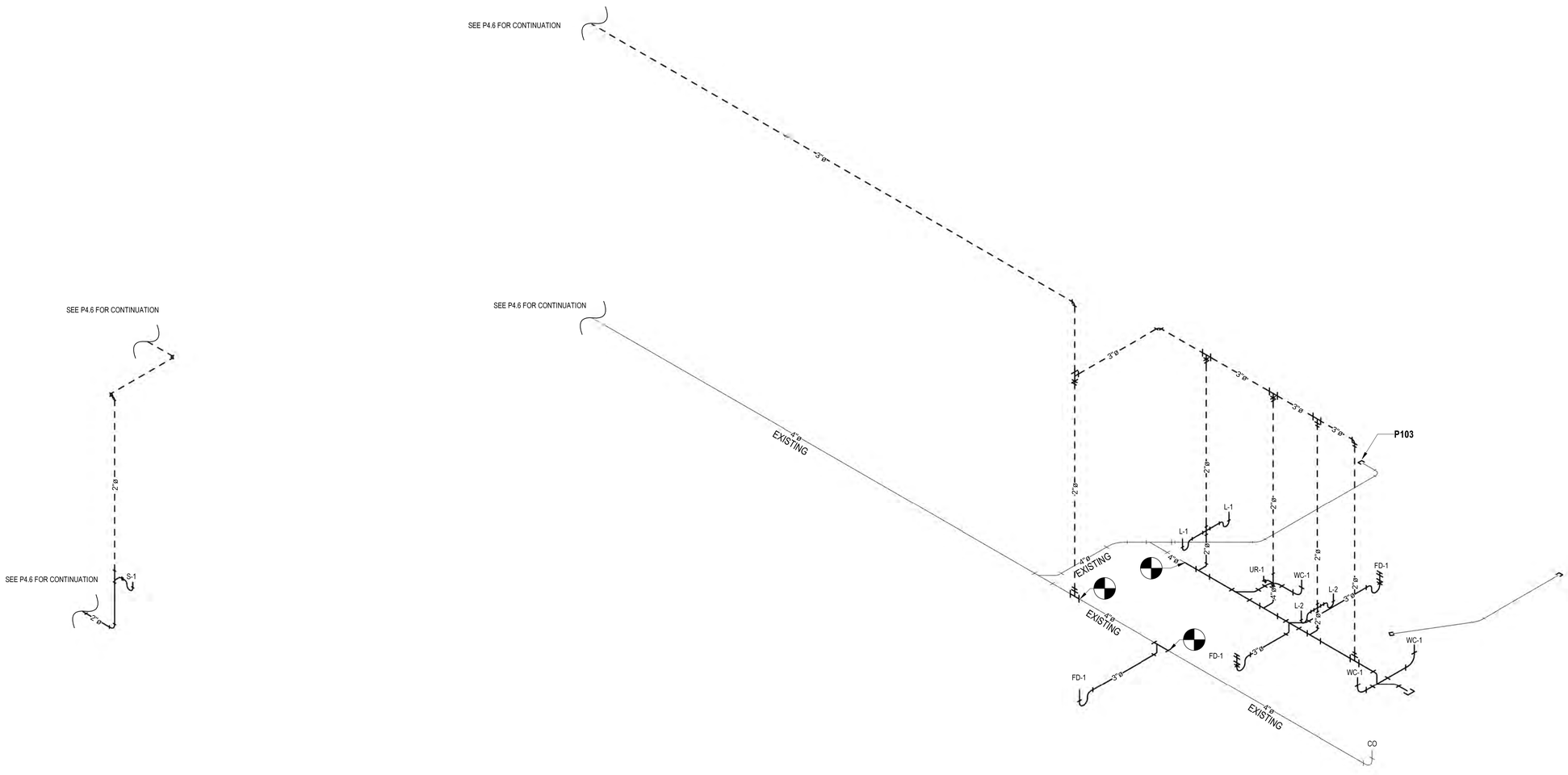

1 PARTIAL SANITARY RISER DIAGRAM
SCALE: NTS

LONG & ASSOCIATES
architects | engineers, inc.
4525 South Manhattan Avenue, Tampa, FL 33611-2305
T:813.839.0206 F:813.839.4616 AAC0010624 IB28 CGC1511025
www.longandassociates.com

THIS DOCUMENT IS COPYRIGHTED MATERIAL & ARCHITECTURAL OWNERSHIP IS RETAINED BY LONG & ASSOCIATES. NO REPRODUCTION OR REUSE WITHOUT WRITTEN CONSENT OF LONG & ASSOCIATES IS PROHIBITED. ALL RIGHTS RESERVED.

HILLSBOROUGH COUNTY SHERIFF'S OFFICE

PINEBROOK BUILDING 4 INTERIOR RENOVATION

1220 - 1238 TECH BLVD.
TAMPA, FL 33619

Seal

WILLIAM E. BROWN, P.E.
PE 57975

No.	Date	Issues & Revisions

TO THE BEST OF THE ARCHITECT'S AND/OR ENGINEER'S KNOWLEDGE THESE PLANS AND SPECIFICATIONS COMPLY WITH THE APPLICABLE MINIMUM BUILDING CODES AND THE APPLICABLE FIRE-SAFETY STANDARDS

Phase:	100% CONSTRUCTION DRAWINGS
Drawn By:	RA
Checked By:	BB
Job No:	19002
Date:	SEPTEMBER 20, 2019

9/19/2019 4:41:43 PM

PARTIAL SANITARY RISER DIAGRAM

P4.7

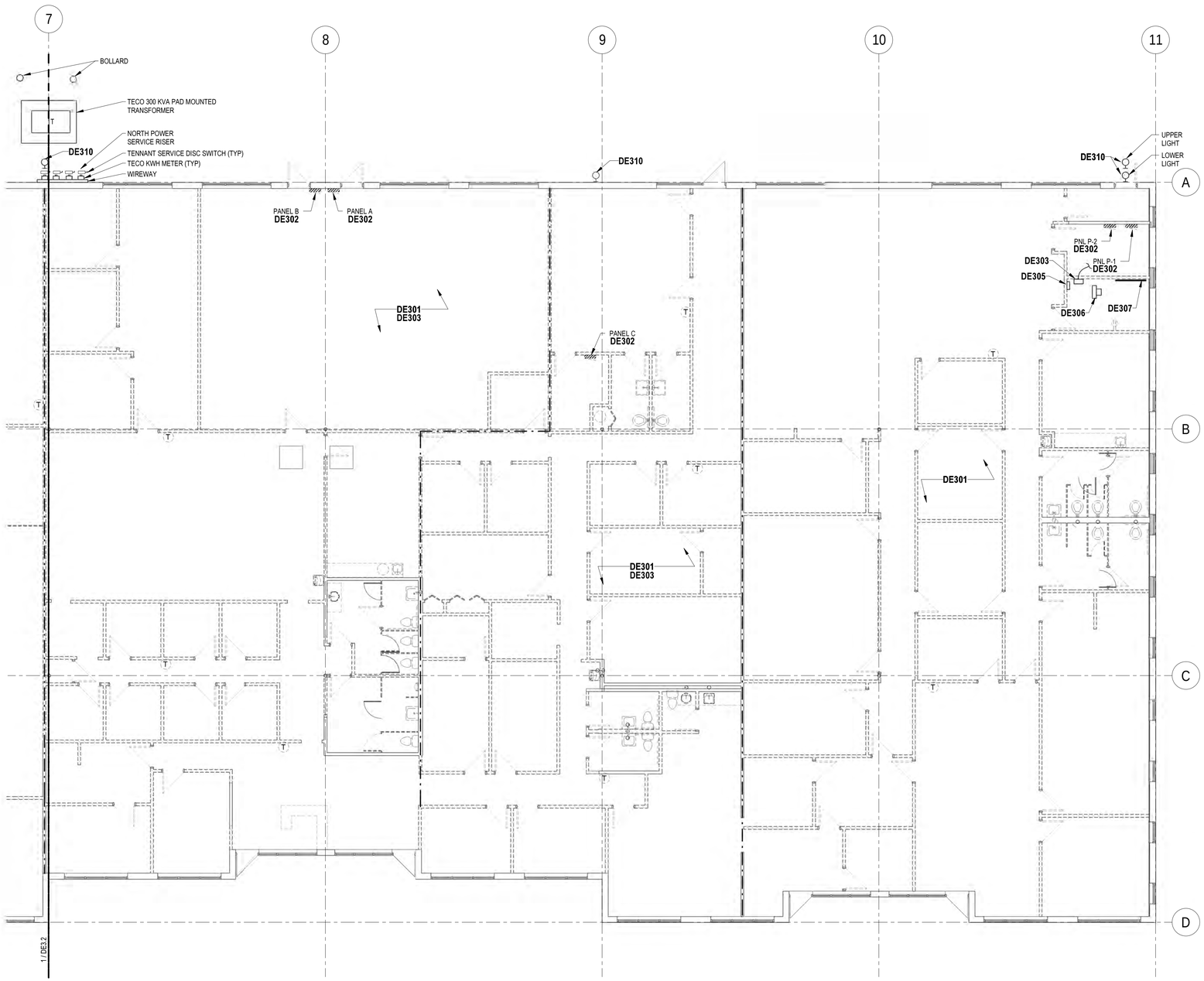

= DENOTES ITEMS AND EQUIPMENT TO BE DEMOLISHED

N

1 PARTIAL ELECTRICAL DEMOLITION PLAN

SCALE: 1/8" = 1'-0"

0' 4' 8' 16'

GENERAL NOTES

A. REFER TO THE SPECIFICATIONS, LEGEND AND GENERAL NOTES ON DRAWING E0.1.

B. COORDINATE ALL WORK WITH THE PROJECT AND PHASING SCHEDULES, OTHER TRADES AND THE OWNER.

KEYNOTE LEGEND

NO.	DESCRIPTION
DE301	TYPICAL, EXISTING WALLS TO BE REMOVED. REMOVE ALL POWER AND SIGNAL DEVICES, DATA OUTLETS AND CABLING BACK TO SOURCE. REMOVE ALL ELECTRICAL EQUIPMENT, RECEPTACLES AND BRANCH CIRCUITS BACK TO SOURCE. FIELD VERIFY SCOPE OF WORK. REMOVE ALL LIGHT FIXTURES AND BRANCH CIRCUITS BACK TO SOURCE.
DE302	TYP. REMOVE PANELBOARD AND REMOVE FEEDER CIRCUIT BACK TO SOURCE.
DE303	COORDINATE THE REMOVAL OF TELCOM SERVICE PROVIDER'S DEMARC EQUIPMENT AND SERVICE CABLING BACK TO LOCAL CABINET PULLBOX ON THE EXTERIOR OF BLDG. FIELD VERIFY DEMARC LOCATION AND SERVICE CABLE ROUTING IN BLDG.
DE305	COORDINATE THE REMOVAL OF BLDG CCTV AND ACS SYSTEM SECURITY HEADEND EQUIPMENT WITH OWNER. REMOVE ALL SECURITY SYSTEM EQUIPMENT, DEVICES AND CABLING.
DE306	COORDINATE THE REMOVAL OF BLDG NETWORK RACK, ELECTRONIC EQUIPMENT, PATCH PANELS, FIBER LIU, ETC WITH OWNER. REMOVE ALL NETWORK EQUIPMENT, DEVICES AND CABLING.
DE307	REMOVE ALL EXISTING TELCO PUNCHDOWN BLOCKS, CABLING, DEVICES, SUPPORTS, BACKBOARD, ETC.
DE310	PROTECT AND MAINTAIN EXISTING EXTERIOR WALL LIGHT, UON.

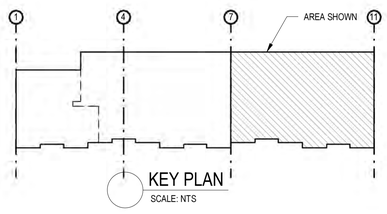

KEY PLAN

SCALE: NTS

LONG & ASSOCIATES
architects | engineers, inc.
4525 South Manhattan Avenue, Tampa, FL 33611-2305
T:813.839.0506 F:813.839.4616 AA C001624 IB28 CGC1511025
www.longandassociates.com

THIS DOCUMENT IS COPYRIGHTED & IS NOT TO BE USED FOR ANY PURPOSE OTHER THAN THE PROJECT SPECIFIED WITHOUT WRITTEN CONSENT OF LONG & ASSOCIATES. ALL RIGHTS RESERVED

HILLSBOROUGH COUNTY SHERIFF'S OFFICE

PINEBROOK BUILDING 4 INTERIOR RENOVATION

1220 - 1238 TECH BLVD.
TAMPA, FL 33619

Seal

ROBERT A. RACELI, P.E.
PE 51483

No.	Date	Issues & Revisions

TO THE BEST OF THE ARCHITECT'S AND/OR ENGINEER'S KNOWLEDGE THESE PLANS AND SPECIFICATIONS COMPLY WITH THE APPLICABLE MINIMUM BUILDING CODES AND THE APPLICABLE FIRE-SAFETY STANDARDS

Phase: 100% CONSTRUCTION DRAWINGS
Drawn By: JK
Checked By: RAR
Job No: 19002
Date: SEPTEMBER 20, 2019
9/19/2019 4:47:01 PM

PARTIAL ELECTRICAL DEMOLITION PLAN

DE3.1

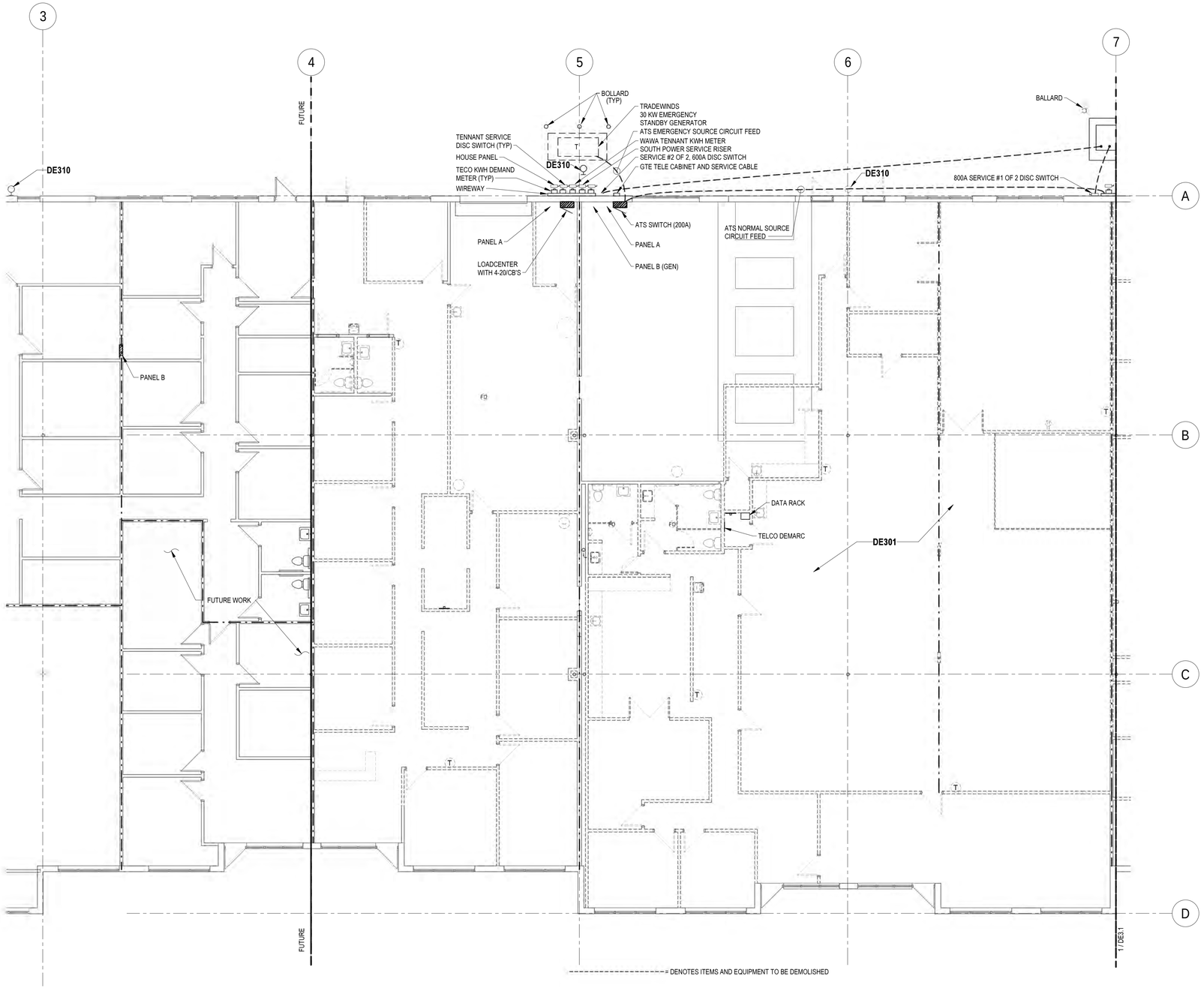

N

1 PARTIAL ELECTRICAL DEMOLITION PLAN

SCALE: 1/8" = 1'-0"

0' 4' 8' 16'

GENERAL NOTES

A. REFER TO THE SPECIFICATIONS, LEGEND AND GENERAL NOTES ON DRAWING E0.1.

B. COORDINATE ALL WORK WITH THE PROJECT AND PHASING SCHEDULES, OTHER TRADES AND THE OWNER.

KEYNOTE LEGEND

NO.	DESCRIPTION
DE301	TYPICAL, EXISTING WALLS TO BE REMOVED. REMOVE ALL POWER AND SIGNAL DEVICES, DATA OUTLETS AND CABLING BACK TO SOURCE. REMOVE ALL ELECTRICAL EQUIPMENT, RECEPTACLES AND BRANCH CIRCUITS BACK TO SOURCE. FIELD VERIFY SCOPE OF WORK. REMOVE ALL LIGHT FIXTURES AND BRANCH CIRCUITS BACK TO SOURCE.
DE310	PROTECT AND MAINTAIN EXISTING EXTERIOR WALL LIGHT, UON.

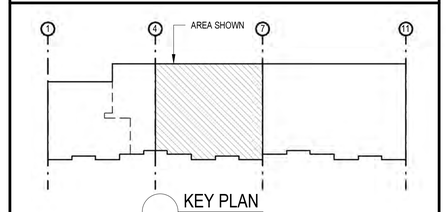

KEY PLAN

SCALE: NTS

LONG & ASSOCIATES
architects | engineers, inc.
4525 South Manhattan Avenue, Tampa, FL 33611-2305
T:813.839.0506 F:813.839.4616 AAC0010424 IBPE CGC1511025
www.longandassociates.com

THIS DOCUMENT IS COPYRIGHTED IN A NOTE TO CLIENT, AND REMAINS THE PROPERTY OF LONG & ASSOCIATES. REPRODUCTION OR REPRESENTATION OF THIS DOCUMENT BY OTHERS WITHOUT WRITTEN PERMISSION IS PROHIBITED. ALL RIGHTS RESERVED.

HILLSBOROUGH COUNTY SHERIFF'S OFFICE

PINEBROOK BUILDING 4 INTERIOR RENOVATION

1220 - 1238 TECH BLVD.
TAMPA, FL 33619

Seal

ROBERT A. RACE II, P.E.
PE 51483

No.	Date	Issues & Revisions

TO THE BEST OF THE ARCHITECT'S AND/OR ENGINEER'S KNOWLEDGE THESE PLANS AND SPECIFICATIONS COMPLY WITH THE APPLICABLE MINIMUM BUILDING CODES AND THE APPLICABLE FIRE-SAFETY STANDARDS

Phase: 100% CONSTRUCTION DRAWINGS
Drawn By: JK
Checked By: RAR
Job No: 19002
Date: SEPTEMBER 20, 2019
9/19/2019 4:47:05 PM

PARTIAL ELECTRICAL DEMOLITION PLAN

DE3.2

GENERAL NOTES

2601.1 ALL WORK SHALL BE PERFORMED IN ACCORDANCE WITH THE FOLLOWING CODES: FLORIDA BUILDING CODE 2017 AND NATIONAL ELECTRICAL CODE NFPA 70 2014, IN SOME CASES PROJECT DRAWINGS AND SPECIFICATIONS MAY EXCEED MINIMUM CODE REQUIREMENTS. UTILITY WORK SHALL COMPLY WITH THE STANDARD SERVICE REQUIREMENTS OF LOCAL UTILITY PROVIDER.

2601.2 REVIEW CONTROL SCHEMATICS AND DIAGRAMS ON MECHANICAL DRAWINGS (DIVISION 15) IN ORDER TO INCLUDE ACCESSORIES REQUIRED WITH MOTOR CONTROLLER DEVICES PROVIDED UNDER DIVISION 16.

2601.3 ALL WIRE AND CABLE SHALL BE STRANDED COPPER WITH THWN/THHN, 600 VOLTS INSULATION. MINIMUM CONDUCTOR SIZE SHALL BE #12 AWG FOR POWER AND LIGHTING CIRCUITS, AND MINIMUM #14 FOR SIGNAL CIRCUITS. SEE COMPLETE SPECIFICATION SECTION 16120.
BRANCH & FEEDER ABOVE GROUND - THIN (90 DEGREES C)
BRANCH & FEEDER BELOW GROUND - THWN (75 DEGREES C)
SECONDARY ELECTRIC SERVICE - THWN (75 DEGREES C)

2601.4 #10 AWG AND SMALLER WIRE CONNECTORS SHALL BE 600 VOLTS ELECTRICAL SPRING CONNECTORS (IDEAL 451/452) OR (3M E12/512). #8 AWG AND LARGER INTERIOR WIRE CONNECTORS SHALL BE THE SPLIT BOLT TYPE WITH INSULATION OF VINYL MASTIC PADS AND VINYL PLASTIC TAPE (3M 2200/2210 AND SUPER 33+) OR LISTED MECHANICAL BARREL TYPE WITH INSULATING COVER.

2601.5 ALL WIRE AND CABLE SHALL BE INSTALLED IN CONDUIT. MINIMUM CONDUIT SIZE SHALL BE 1/2" AND SHALL BE CONCEALED IN FINISHED AREAS AND PROTECTED IN UNFINISHED AREAS.

2601.6 ELECTRICAL METALLIC TUBING MAY BE USED IN FINISHED AREAS WITH COMPRESSION COUPLINGS AND FITTINGS. E.M.T. MAY ALSO BE USED IN UNFINISHED AREAS WHERE PROTECTED IN COLUMN WEBS OR UP IN JOIST SPACE.

2601.7 RIGID GALVANIZED STEEL CONDUIT SHALL BE INSTALLED WHERE CONDUITS ARE SUSCEPTIBLE TO PHYSICAL DAMAGE. RIGID ALUMINUM CONDUIT AND SHALL BE INSTALLED IN ALL EXTERIOR LOCATIONS ABOVE GROUND.

2601.8 STEEL BONDING TYPE LOCKNUTS AND INSULATED THROAT CONNECTORS SHALL BE INSTALLED WHERE CONDUITS ENTER PANELBOARD ENCLOSURES, WIREWAYS, STARTERS, & SWITCH ENCLOSURES, JUNCTION BOXES AND ALL METALLIC ENCLOSURE BOXES WHERE REQUIRED BY THE NEC. FIELD INSTALLABLE INSERTS SHALL NOT BE ALLOWED. SET-SCREW CONNECTORS IN INTERIOR LOCATIONS, COMPRESSION IN EXTERIOR LOCATIONS.

2601.9 SCHEDULE 40 PVC CONDUIT SHALL BE INSTALLED BELOW GRADE. THE USE OF SCHEDULE 40 PVC ELBOWS AND CONDUIT STUB-UPS SHALL NOT BE PERMITTED EXCEPT INSIDE UTILITY TRANSFORMERS AND HANDHOLES. TRANSITION BELOW GRADE TO BITUMASTIC COATED METAL CONDUIT.

2601.10 FINAL CONNECTIONS TO MOTORS, VIBRATING EQUIPMENT AND WATER HEATERS SHALL BE MADE WITH LIQUID-TIGHT FLEXIBLE METAL CONDUIT AND CONNECTORS. FINAL CONNECTIONS TO LIGHT FIXTURES SHALL BE MADE WITH FLEXIBLE METAL CONDUIT AND CONNECTORS.

2601.11 GROUNDING SYSTEMS PREPARE FOUNDATION AND/OR GRADE BEAM REINFORCING BARS TO SERVE AS GROUNDING ELECTRODE PER NEC ARTICLE 250-52. IN ADDITION, USE OTHER AVAILABLE ON-PREMISE ITEMS PER NEC ARTICLE 250-52. ADDITIONAL ELECTRODES DESCRIBED IN NEC ARTICLE 250.

2601.12 GREEN COLORED INSULATED GROUNDING CONDUCTOR(S) SHALL BE INCLUDED IN ALL RACEWAY AND RACEWAY SYSTEMS.

2601.13 FUSES SHALL BE DUAL ELEMENT, NEMA CLASS RK1 OR RK5.

2601.14 ALL LIGHTING FIXTURES SHALL BE SUPPORTED INDEPENDENTLY OF ALL SUSPENDED CEILINGS. THE FIXTURES SHALL BE SUPPORTED FROM THE STRUCTURE ABOVE WITH 2-#14 GAUGE TIE WIRES.

2601.15 LIGHT FIXTURE CATALOG NUMBER MAY OR MAY NOT REFLECT TRIM OR FLANGE REQUIRED FOR A SPECIFIC CEILING TYPE IN A ROOM. VERIFY CEILING TYPES FROM ARCHITECTURAL DRAWINGS TO DETERMINE WHETHER THE FIXTURE REQUIRES G, F, Z, H, T OR C TRIM.

2601.16 VERIFY ALL DOOR SWINGS WITH THE FINAL ARCHITECTURAL DRAWINGS PRIOR TO ROUGHING IN ANY SWITCHES.

2601.17 OUTLETS WHICH ARE NOTED FOR A PARTICULAR PIECE OF EQUIPMENT ARE SO NOTED IN ORDER THAT THE CONTRACTOR CAN COORDINATE THE LOCATION OF THE OUTLET WITH THE CONNECTING LOCATION OF THE EQUIPMENT. THIS COORDINATION SHALL BE THE RESPONSIBILITY OF THE CONTRACTOR.

2601.18 OUTLET AND JUNCTION BOXES SHALL NOT BE MOUNTED BACK-TO-BACK IN WALLS. PROVIDE MINIMUM 6" HORIZONTAL SEPARATION.

2601.19 CIRCUIT DIRECTORIES FOR PANELBOARDS SHALL BE MACHINE PRINTED. HAND WRITTEN SHALL BE UNACCEPTABLE. INCLUDE ROOM NAME/NUMBER WHERE BRANCH CIRCUIT SERVES ON DIRECTORY CARD.

2601.20 FURNISH OWNER WITH MINIMUM THREE (3) SPARE FUSES OF EACH SIZE AND CLASS PROVIDED UNDER CONTRACT.

2601.21 EXPANSION/DEFLECTION CONDUIT COUPLINGS SHALL BE INSTALLED ACROSS ALL STRUCTURAL EXPANSION JOINTS.

2601.22 PROVIDE PANELBOARD AND BRANCH CIRCUIT DESIGNATIONS ON ALL J-BOX AND PULLBOX COVERPLATES IDENTIFYING BRANCH CIRCUIT AND CORRESPONDING SOURCE PANELBOARD CONTAINED WITHIN BOX.

2601.23 COMPUTER NETWORK, FIRE ALARM, AND OTHER SIGNAL SYSTEM J-BOX COVERS SHALL BE LABELED WITH PERMANENT BLACK MARKER. (I.E. FIRE ALARM J-BOX SHALL READ: "FIRE ALARM").

2601.24 INSTALL INTUMESCENT FIRESEAL AT ALL SLEEVE/CONDUIT PENETRATIONS THROUGH FIRE RATED WALLS TO MAINTAIN RATING OF WALLS. REFER TO LIFE SAFETY DRAWINGS FOR ADDITIONAL REQUIREMENTS. REFER TO NEC ARTICLE 300.21 AND PROJECT SPECIFICATIONS

2601.25 ALL RECEPTACLE CIRCUITS SHALL HAVE #10 AWG NEUTRALS.

2601.26 ALL RECEPTACE AND LIGHT SWITCH COVERPLATES SHALL BE LABELED WITH PANELBOARD AND CIRCUIT NUMBER.

2601.27 ALL J-BOX AND OUTLET BOX COVERS SHALL BE LABELED TO INDICATE BRANCH/FEEDER CIRCUIT NUMBER(S) AND SOURCE PANEL CONTAINED WITHIN BOX.

LEGEND (CONTINUE)

SYMBOL	DESCRIPTION
J	JUNCTION BOX.
	208/120V PANELBOARD.
	MISC PANEL AS NOTED ON FLOORPLANS.
SPD	TRANSIENT VOLTAGE SURGE SUPPRESSION DEVICE.
A	WALL BOX MOUNTED BEHIND MONITOR, SEE DWG AND FLOOR PLAN KEYNOTES FOR ADDITIONAL REQUIREMENTS.
	DUPLEX RECEPTACLE, NEMA TYPE 5-20R, CENTERLINE MOUNTED 18" AFF IN FINISHED AREAS AND 42" AFF IN UNFINISHED AREAS, UON.
	DUPLEX RECEPTACLE, TOP RECEPTACLE OUTLET CONTROLLED BY CEILING MOUNTED RECEPTACLE CONTROLLER BRANCH CIRCUIT CONTACT.
	DUPLEX RECEPTACLE NEMA TYPE 5-20R CENTERLINE MOUNTED ABOVE CASEWORK BACKSPLASH. COORDINATE WITH ARCHITECTURAL DRAWINGS.
	QUADUPLEX RECEPTACLE, NEMA TYPE 5-2OR, CENTERLINE MOUNTED ABOVE CASEWORK BACKSPLASH. COORDINATE WITH ARCHITECTURAL DRAWINGS.
	QUADUPLEX RECEPTACLE, NEMA TYPE 5-2OR, CENTERLINE MOUNTED 18" AFF IN FINISHED AREAS AND 42" AFF IN UNFINISHED AREAS, UON.
	SAME AS ABOVE BUT FLOOR MOUTNED. FLOOR MOUNTED RECEPTACLE OUTLET BOX. SEE FLOOR PLAN DWGS OR FLOOR BOX REQUIREMENTS.
	SINGLE RECEPTACLE, NEMA TYPE 5-20R CENTERLINE MOUNTED 18" AFF.
	SPECIAL RECEPTACLE. COORDINATE NEMA CONFIGURATION WITH EQUIPMENT SUPPLIED.
AC C	DATA/VOICE OUTLET. 4"x4" DOUBLE GANG, DEEP BACKBOX WITH SINGLE GANG FACE PLATE WITH BLANK SS COVERPLATE OVER OUTLET. PROVIDE 1" CONDUIT FROM BOX, CONCEALED INTO CEILING SPACE AND STUBBED-OUT AND BUSHED. OUTLET TYPICALLY MOUNTED 18" AFF UNLESS ABOVE COUNTER. "AC" NEXT SYMBOL INDICATES OUTLET IS MOUNTED ABOVE COUNTER. TELECOM, FACE PLATE, JACKS AND WIRING BY OTHERS.
C 3	SAME AS ABOVE, BUT FLOOR MOUNTED.
C WAP	WIRELESS ACCESS POINT.
	SECURITY SYSTEM DOOR CONTACT.
	ELECTRIC DOOR STRIKE.
S_T	SINGLE POLE TIMER SWITCH CENTERLINE MOUNTED 42" AFF.
S_a	SINGLE POLE SWITCH CENTERLINE MOUNTED 42" AFF. SMALL LETTER INDICATES CONTROLLED OUTLET.
S_2	DOUBLE POLE SWITCH CENTERLINE MOUNTED 42" AFF.
S_3	THREE WAY SWITCH CENTERLINE MOUNTED 42" AFF.
S_4	FOUR WAY SWITCH CENTERLINE MOUNTED 42" AFF.
S_D	DIMMER SWITCH.
S_M	MOTOR RATED SWITCH.
S_{sc}	SPEED CONTROL SWITCH.
	VACANCY SENSOR/WALL SWITCH, OFF - AUTO - ON. MOUNT 42" AFF.
#10	CONDUIT CONCEALED IN FINISHED AREAS OR EXPOSED IN UNFINISHED AREAS. SHORT SLASH LINES INDICATE UNGROUNDED CONDUCTORS. LONG SLASH LINE INDICATES NEUTRAL CONDUCTOR. X MARK INDICATES GROUNDING CONDUCTOR. NO SLASH LINES OR MARKS INDICATES A MINIMUM OF THREE (3) CONDUCTORS IN A RACEWAY. CONDUCTOR SIZE INDICATED IF OTHER THAN #12 AWG.
	CONDUIT CONCEALED IN OR BELOW FLOOR SLAB OR CONCEALED 30" MINIMUM BELOW FINISHED GRADE.
LA-1,3	HOMERUN TO PANELBOARD (i.e. PANELBOARD LA, CIRCUITS 1 AND 3 OR POLE SPACES 1 AND 3).
	FLEXIBLE METAL CONDUIT.
5	MOTOR OUTLET-NUMERAL INDICATES HORSEPOWER RATING.
	EXHAUST FAN WITH INTEGRAL DISCONNECT.
30	NON-FUSED, HEAVY-DUTY DISCONNECT SWITCH-NUMERAL INDICATES AMPERE RATING.
30/15	FUSED, HEAVY-DUTY SWITCH. NUMERALS INDICATE AMPERE RATING OF SWITCH AND FUSE SIZE, RESPECTIVELY.
	DISCONNECT SWITCH FURNISHED BY DIVISION 15, INSTALLED AND WIRED BY DIVISION 16.
60/40	COMBINATION MOTOR STARTER/FUSED DISCONNECT SWITCH. NUMERALS INDICATE NEMA STARTER SIZE AND SWITCH/FUSE SIZE RESPECTIVELY.
C	2X4 RECESSED LUMINAIRE. CAPITAL LETTER INDICATES FIXTURE TYPE.
F	2X2 RECESSED LUMINAIRE. CAPITAL LETTER INDICATES FIXTURE TYPE.
A	2X4 RECESSED LUMINAIRE MOUNTED IN A HARD CEILING. LETTER INDICATES FIXTURE TYPE.
F1	2X2 RECESSED LUMINAIRE MOUNTED IN A HARD CEILING. LETTER INDICATES FIXTURE TYPE.

SYMBOL	DESCRIPTION
JJ	WALL MOUNTED LUMINAIRE. CAPITAL LETTER INDICATES FIXTURE TYPE.
W	WALL OR POLE MOUNTED LUMINAIRE. CAPITAL LETTER INDICATES FIXTURE TYPE.
N	EMERGENCY UNIT FIXTURE. CAPITAL LETTER INDICATES FIXTURE TYPE.
M	INDUSTRIAL OR STRIP LUMINAIRE. CAPITAL LETTER INDICATES FIXTURE TYPE.
H	SURFACE OR RECESSED DOWN LUMINAIRE. CAPITAL LETTER INDICATES FIXTURE TYPE.
X2	CEILING MOUNTED ILLUMINATED EXIT SIGN. SHADED QUADRANT INDICATES FACE SIDE. ARROW INDICATES EGRESS FLOW.
X1	WALL MOUNTED ILLUMINATED EXIT SIGN. SHADED QUADRANT INDICATES FACE SIDE.
	GROUNDING ELECTRODE
FACP	SURFACE MOUNTED FIRE ALARM CONTROL PANEL - TOP OF PANEL SHALL BE MOUNTED 6'-6" AFF.
FAA	FLUSH MOUNTED FIRE ALARM ANNUNCIATOR PANEL
	CONTACTOR AS NOTED.
	E-STOP OR SHUNT-TRIP STATION ASN NOTED.
OS	CEILING MOUNTED OCCUPANCY SENSOR
VS	CEILING MOUNTED VACANCY SENSOR
D	CEILING MOUNTED LIGHTING DAYLIGHT HARVESTING SENSOR
	MOTOR
T	THERMOSTAT - SUPPLIED BY DIV 15, WIRED BY ELECT CONTRACTOR
TV	FLUSH MOUNTED TELEVISION OUTLET
	GROUND ROD
F	COMBINATION SPEAKER/LIGHT UNIT. BOTTOM OF LENS NOT LESS THAN 80" AFF NOR HIGHER THAN 96" AFF. MINIMUM 75cd UNLESS MARKED OTHERWISE.
S	FIRE ALARM WALL MOUNTED SPEAKER.
F	LIGHT UNIT ONLY. BOTTOM OF LENS NOT LESS THAN 80" AFF NOR HIGHER THAN 96" AFF. MINIMUM 75cd UNLESS MARKED OTHERWISE.
H	FIXED TEMPERATURE (135°F) HEAT DETECTOR.
S	CEILING MOUNTED SMOKE DETECTOR.
S D	DUCT MOUNTED SMOKE DETECTOR.
F	MANUAL PULL STATION CENTERLINE MOUNTED 42" AFF.
AC	MOUNT 6" ABOVE COUNTER
AIC	AMPERES INTERRUPTING CAPACITY
AFF	ABOVE FINISHED FLOOR
AFG	ABOVE FINISHED GRADE
CLG	CEILING, MOUNTED FLUSH
CND	CONDUIT
EGC	EQUIPMENT GROUNDING CONDUCTOR
EWC	ELECTRIC WATER COOLER
EWH	ELECTRIC WATER HEATER
FAA	REMOTE FIRE ALARM ANNUNCIATOR PANEL
GC	GRID LAY-IN CEILING
GF	GROUND FAULT CIRCUIT INTERRUPTER
GRA	GENERATOR REMOTE ANNUNCIATOR
MTD	MOUNTED
NL	NIGHT LIGHT
RGS	RIGID GALVANIZED STEEL
SCC	SHORT CIRCUIT CURRENT, 3 PHASE SYMMETRICAL
UON	UNLESS OTHERWISE NOTED
WP	WEATHERPROOF, OUTDOOR
TR	TAMPER RESISTANT

LUMINAIRE SCHEDULE

TYPE	DESCRIPTION	MANUFACTURER	CATALOG NO.	LAMP	MOUNTING	REMARKS
C C1	RECESSED TROFFER 2'X4' GRID	LITHONIA H.E. WILLIAMS	2BLT4-48L-ADP-GZ10-LP835 LT-24-L43/835-AF-DIM-UNV	LED 4961 LUMENS 3500K 82 CRI, 38 WATTS	RECESSED GRID	SEE LIGHTING FLOOR PLAN FOR FIXTURES REQUIRING DIMMING AND DAY LIGHT SENSORS. PROVIDE FIXTURE OPTIONS TO SUPPORT DIMING AND DAY LIGHT SENSING AS REQUIRED. TYPE "C1" SAME AS "C", EXCEPT 6017 LUMENS AND 48 WATTS.
F F1	RECESSED TROFFER 2'X2' GRID	LITHONIA H.E. WILLIAMS	2BLT2-33L-ADP-GZ10-LP835 LT-22-L34/835-AF-DIM-UNV	LED 3333 LUMENS 3500K 82 CRI, 27 WATTS	RECESSED GRID	SEE LIGHTING FLOOR PLAN FOR FIXTURES REQUIRING DIMMING AND DAY LIGHT SENSORS. PROVIDE FIXTURE OPTIONS TO SUPPORT DIMMING AND DAY LIGHT SENSING AS REQUIRED. TYPE "F1" IS SAME AS TYPE "F", EXCEPT FIXTURE HAS RECESSED FRAME IN KIT FOR MOUNTING IN GYPBOARD CEILING.
H	4" DOWN LIGHT	LITHONIA LIGHTOLIER	LDN4-35/15-L04-AR-LSS-MVOLT-GZ10 C4L-15-N-U-VB-Z10V-(EM) / C4L10DL35KCLPVB	LED 1444 LUMENS 3500K 20.4 WATTS	RECESSED GRID	SEE LIGHTING FLOOR PLAN FOR FIXTURES REQUIRING DIMMING. PROVIDE FIXTURE DIMMING OPTIONS AS RQUIRED. PROVIDE WALL DIMMING CONTROLS AS RQUIRED.
JJ	WALL MOUNTED LUMINAIRE	BROWNLEE	5178-48-BN-H32-35K-ES	LED 4,119 LUMENS 3500K, 32 WATTS	WALL MOUNTED	BRUSHED NICKEL HOUSING, 5 YEARS LIMITED WARRANTY.
K	WALL MOUNTED LUMINAIRE	KENALL	SSA-4-0-67L35K-DDC-DV-SYM/G-TORX	LED 5,903 LUMENS 3500K, 74 WATTS	WALL MOUNTED	UL LISTED FOR DAMP LOCATION, IMPACT RESISTAN FIXTURE.
M	48" STRIP LIGHT	LITHONIA H.E. WILLIAMS	ZL1N-L48-7000LM-FST-MVOLT-35K-80CRI-WH/WGZ48 75L-4-L65/835-A12125-DIM-UNV	LED, 6916 LUMENS 3500K 80 CRI, 62 WATTS	SURFACE OR PENDANT	PROVIDE WIRE GUARD, MOUNTED AT 15" AFF TO BOTTOM OF FIXTURE, UON. 0-10V DIMMING.
N	EMERGENCY LUMINAIRE	LITHONIA BEGHELLI	ELM2L-UVOLT-SDRT XLP-LED1-HO	(2) LED HEADS	SURFACE	WHITE HOUSING, SELF-TEST/ SELF-DIAGNOSTICS, 90 MIN INTEGRAL BATTERY/CHARGER. SEALED NICKEL CADMIUM BATTERIES.
N1	EMERGENCY LUMINAIRE	ISOLITE	ERG 6-NC22-2-LED MR16(L) 6V 5W-SD	(2) LED HEADS	CEILING MOUNTED	WHITE HOUSING, SELF-TEST/ SELF-DIAGNOSTICS, 90 MIN INTEGRAL BATTERY/CHARGER. SEALED NICKEL CADMIUM BATTERIES.
W	WALL LIGHT EGRESS	LITHONIA GARDCO	WST-P2-40K-VW-MVOLT-E20WH-DDBXD 101L-16L-530-NW-G1-2-EBPC-BZ	LED, 2944 LUMENS 4000K, 28 WATTS	SURFACE	PROVIDE WITH INTEGRAL 90 MINUTE BATTERY BACK-UP AND CHARGER.
X1, X2	EXIT SINGLE FACE, EXIT DOUBLE FACE	LITHONIA BEGHELLI	LE-S-W-1(2)-R-ELN-SD LC1-E-SA-LR-U-W-W-AT	LED	UNIVERSAL, WHERE WALL MOUNTED, MOUNT AT 6'-8" AFF, UNLESS MOUNTED OTHERWISE	WHITE DIE-CAST ALUMINUM HOUSING WITH BOX FILE SUPPORT BRIDGE PUNCH OUT CHEVRONS AS REQUIRED. RED LETTERING, INTEGRAL SELF-DIAGNOSTICS, 90 MINUTE NICAD EMERGENCY BATTERY/ CHARGER.

NOTE: **ANY REQUEST FOR SUBSTITUTION MUST BE MADE TEN DAYS PRIORTO BID. ALL REQUESTS MUST INCLUDE PHOTOMETRICS, AND ONLY THOSE ISSUED THRU AN OFFICEAL ADDENDUM WILL BE ALLOWED TO BID.**

LONG & ASSOCIATES
architects | engineers, inc.
4525 South Manhattan Avenue, Tampa, FL 33611-2305
T:813.839.0506 F:813.839.4616 AAC001624 1828 CGC1511025
www.longandassociates.com

THIS DOCUMENT IS COPYRIGHT MATERIAL. ANY DISCLOSURE, UNAUTHORIZED USE, DISSEMINATION OR DUPLICATION WITHOUT THE EXPRESS WRITTEN CONSENT OF LONG & ASSOCIATES IS PROHIBITED ALL RIGHTS RESERVED

HILLSBOROUGH COUNTY SHERIFF'S OFFICE

PINEBROOK BUILDING 4 INTERIOR RENOVATION

1220 - 1238 TECH BLVD.
TAMPA, FL 33619

Seal

ROBERT A. RACE II, P.E.
PE 51483

No.	Date	Issues & Revisions

TO THE BEST OF THE ARCHITECT'S AND/OR ENGINEER'S KNOWLEDGE THESE PLANS AND SPECIFICATIONS COMPLY WITH THE APPLICABLE MINIMUM BUILDING CODES AND THE APPLICABLE FIRE-SAFETY STANDARDS

Phase: 100% CONSTRUCTION DRAWINGS
Drawn By: XG
Checked By: RAR
Job No: 19002
Date: SEPTEMBER 20, 2019
9/19/2019 4:47:08 PM

LEGEND, GENERAL NOTES & DETAILS

E0.1

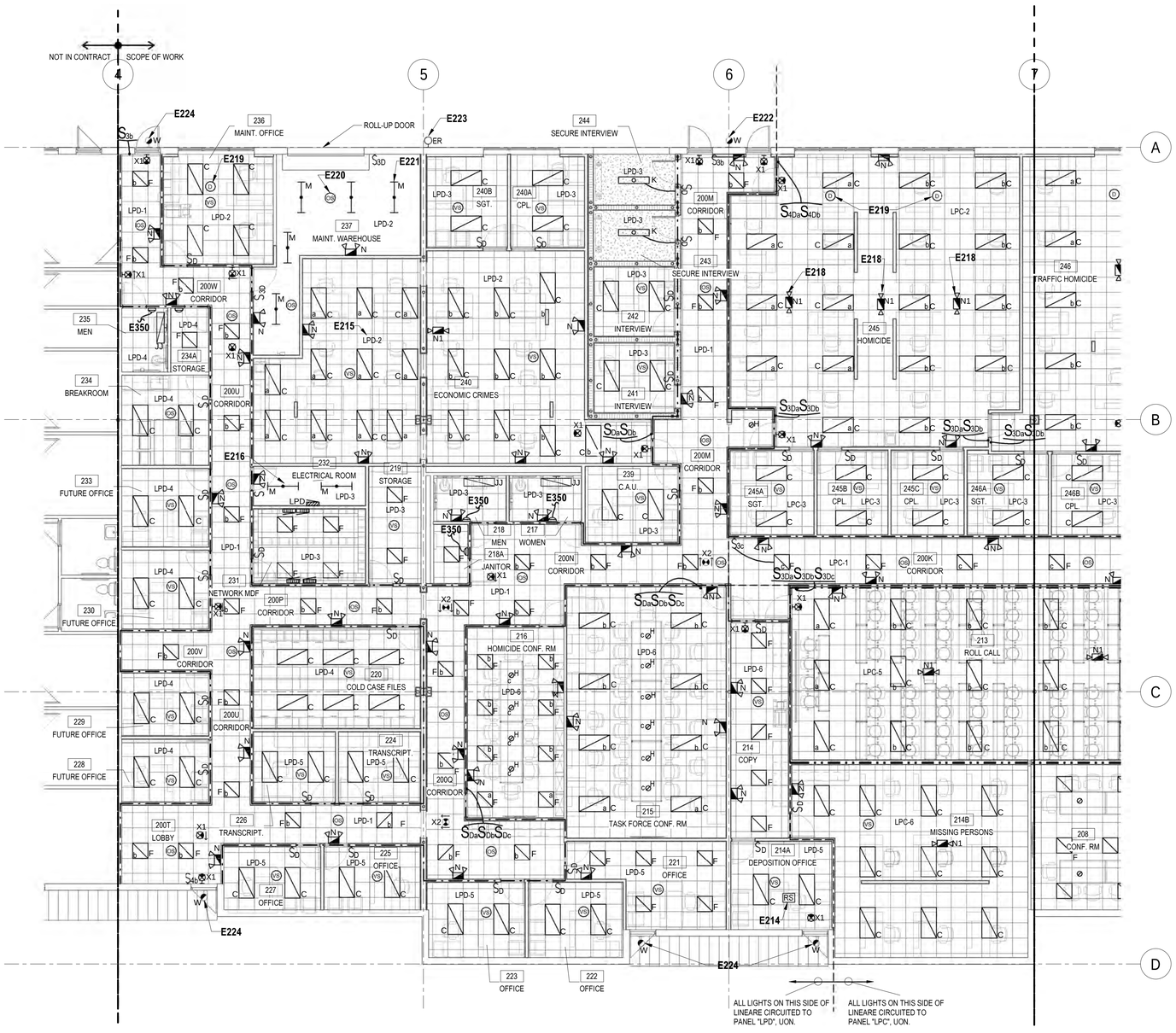

N 1 PARTIAL LIGHTING PLAN

SCALE: 1/8" = 1'-0"

0' 4' 8' 16'

GENERAL NOTES

A. REFER TO THE SPECIFICATIONS, LEGEND AND GENERAL NOTES ON DRAWING E0.1.

B. COORDINATE ALL WORK WITH THE PROJECT AND PHASING SCHEDULES, OTHER TRADES AND THE OWNER.

C. U.L. LISTED ASSEMBLIES SHALL BE INSTALLED AT ALL PENETRATIONS OF RATED WALLS. JUNCTION BOXES LOCATED WITHIN RATED WALLS SHALL BE WRAPPED WITH FIRE STOP PUTTY PADS.

D. ALL WORK SHALL BE CONCEALED UNLESS OTHERWISE NOTED.

E. TYPICAL, LIGHT FIXTURES SHALL BE INDEPENDENTLY SUPPORTED FROM THE OVERHEAD STRUCTURE BY CEILING GRID TYPE WIRES CONNECTED TO TWO OPPOSITE CORNERS.

F. FIXTURE WHIPS SHALL NOT LAY ON THE CEILING TILES.

G. PROVIDE JUNCTION BOXES AS REQUIRED. PROVIDE ADDITIONAL FLEX WHIPS ABOVE JUNCTION BOXES TO EACH INDIVIDUAL FIXTURE EXCEPT WHERE CONTINUOUS ROWS AND FIXTURES LISTED FOR THROUGH WIRING. FLEX SHALL NOT EXCEED 6'-0" AND SHALL HAVE #12 AWG CONDUCTORS. FIXTURES SHALL NOT BE DAISY CHAINED.

H. PROVIDE #10 AWG HOMERUN CONDUCTORS FOR ALL 120 VOLT BRANCH CIRCUITS EXCEEDING 100 FEET IN LENGTH TO MINIMIZE VOLTAGE DROP.

I. EXTEND AN UNSWITCHED CONDUCTOR TO FIXTURES WITH EMERGENCY BATTERY BALLASTS AND TO EXIT LIGHTS.

KEYNOTE LEGEND

NO.	DESCRIPTION
E214	TYPICAL, FOR ALL PRIVATE OFFICES, CONFERENCE ROOMS, ROOMS USED PRIMARILY FOR PRINTING AND/OR COPY FUNCTIONS, BREAK ROOMS AND INDIVIDUAL WORKSTATIONS. RECEPTACLE SWITCH PACKS MOUNTED ABOVE CEILING. 120V, 20 AMP RATED RECEPTACLE POWER RELAY SHALL CONTROL THIS ROOM'S UPPER RECEPTACLES IN OUTLETS TO COMPLY WITH ASHRAE 90.1, 8.4.2. SEE POWER PLAN FOR AUTOMATIC RECEPTACLE CONTROL REQUIREMENTS. RECEPTACLES SHALL BE SWITCHED-OFF BY ROOM VACANCY SENSOR WHEN ROOM IS VACANT. SEE DETAIL DRAWING FOR CONTROL SCHEMATICS. PROVIDE QUANTITY OF POWER PACKS AS REQUIRED.
E215	TYP. PANEL/CIRCUIT NUMBER SERVING LIGHT FIXTURES IN ROOM.
E216	TYPICAL, MOUNT FIXTURES IN ROOM AT 10'-0" AFF TO BOTTOM OF FIXTURE PROVIDE UNISTRUT AND ALL THREAD HANGER RODS AS REQUIRED TO SUPPORT FIXTURE FROM STRUCTURE.
E218	TYPICAL, CEILING MOUNTED EMERGENCY LIGHT.
E219	TYPICAL, ALL LIGHT FIXTURES WITHIN 15' OF WINDOW SHALL BE CONTROLLED (DIMMED) BY DAY LIGHT SENSOR/DIMMER MODULES. PROVIDE DAY LGIHT SENSORS, DIMMER MODULES, CONTROL WIRING AND ALL ACCESSORIES AS REQUIRED TO DIM LIGHT FIXTURES FOR DAY HARVESTING. ALL CONTROL/SENSOR COMPONETNS SHALL BE COMPATIBLE WITH FIXTURE LED AND DIMMERS DRIVERS.
E220	TYP, PENDANT MOUNT SIGNAL DEVICE OUTLET BOX AT 6" BELOW BOTTOM OF LIGHTING FIXTURES IN ROOM.
E221	TYPICAL, MOUNT FIXTURES IN ROOM AT 14' AFF TO BOTTOM OF FIXTURE PROVIDE UNISTRUT AND ALL THREAD HANGER RODS AS REQUIRED TO SUPPORT FIXTURE FROM STRUCTURE.
E222	REMOVE EXISTING EXTERIOR LIGHT AND REPLACE WITH NEW LIGHT SHOWN.
E223	PROTECT AND MAINTAIN EXISTING LIGHT FIXTURE.
E224	PROVIDE NEW EXTERIOR WALL MOUNTED LIGHT FIXTURE. EXTEND EXISTING BLDG. EXTERIOR LIGHTING BRANCH CIRCUIT TO NEW LIGHT AS REQUIRED. FIELD VERIFY WORK SCOPE.
E350	EXTEND SWITCH LIGHTING CIRCUIT TO ROOM EXHAUST FAN. PROVIDE WALL OCCUPANCY SENSOR TO CONTROL RESTROOM LIGHTS/FAN.

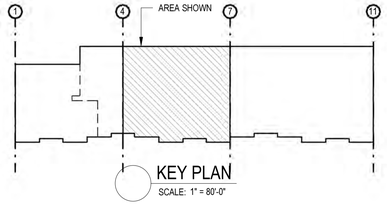

KEY PLAN

SCALE: 1" = 80'-0"

LONG & ASSOCIATES
architects | engineers, inc.
4525 South Manhattan Avenue, Tampa, FL 33611-2305
T:813.839.0506 F:813.839.4616 AAC001624 IB28 CGC1511025
www.longandassociates.com

THIS DOCUMENT IS COPYRIGHTED IN A NOTE TO CLIENT, OWNERSHIP OF DOCUMENTS OR ESTIMATES OF THE ARCHITECT
REPRODUCTIONS EXPRESS WRITTEN CONSENT OF LONG & ASSOCIATES IS PROHIBITED. ALL RIGHTS RESERVED

HILLSBOROUGH COUNTY SHERIFF'S OFFICE

PINEBROOK BUILDING 4 INTERIOR RENOVATION

1220 - 1238 TECH BLVD.
TAMPA, FL 33619

Seal

ROBERT A. RACE II, P.E.
PE 51483

No.	Date	Issues & Revisions

TO THE BEST OF THE ARCHITECT'S AND/OR ENGINEER'S KNOWLEDGE THESE PLANS AND SPECIFICATIONS COMPLY WITH THE APPLICABLE MINIMUM BUILDING CODES AND THE APPLICABLE FIRE-SAFETY STANDARDS

Phase: 100% CONSTRUCTION DRAWINGS
Drawn By: JK
Checked By: RAR
Job No: 19002
Date: SEPTEMBER 20, 2019
9/19/2019 4:47:16 PM

PARTIAL LIGHTING PLAN

E2.1

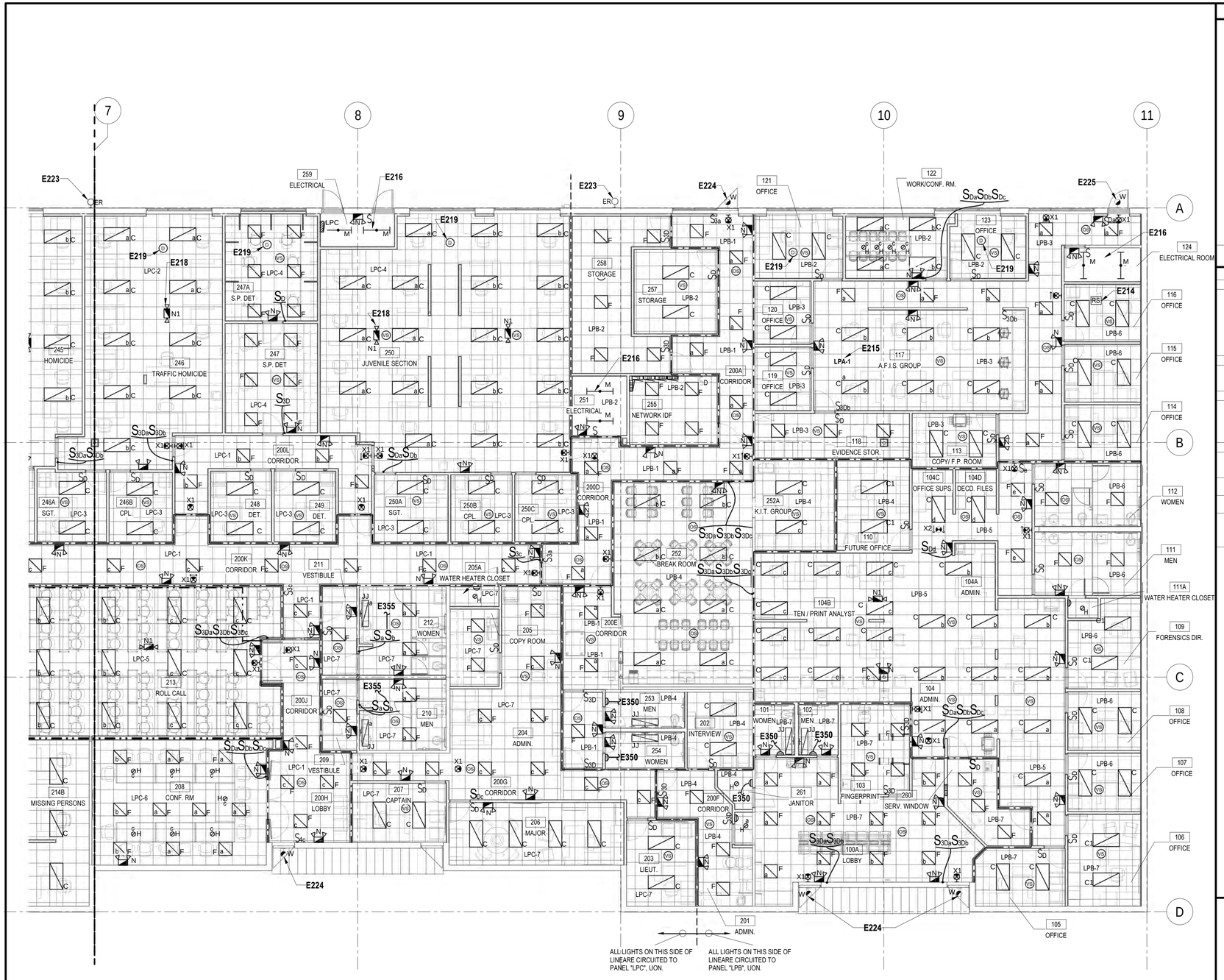

N 2 PARTIAL LIGHTING PLAN

SCALE: 1/8" = 1'-0"

0' 4' 8' 16'

GENERAL NOTES

A. REFER TO THE SPECIFICATIONS, LEGEND AND GENERAL NOTES ON DRAWING E0.1.

B. COORDINATE ALL WORK WITH THE PROJECT AND PHASING SCHEDULES, OTHER TRADES AND THE OWNER.

C. U.L. LISTED ASSEMBLIES SHALL BE INSTALLED AT ALL PENETRATIONS OF RATED WALLS. JUNCTION BOXES LOCATED WITHIN RATED WALLS SHALL BE WRAPPED WITH FIRE STOP PUTTY PADS.

D. ALL WORK SHALL BE CONCEALED UNLESS OTHERWISE NOTED.

E. TYPICAL, LIGHT FIXTURES SHALL BE INDEPENDENTLY SUPPORTED FROM THE OVERHEAD STRUCTURE BY CEILING GRID TYPE WIRES CONNECTED TO TWO OPPOSITE CORNERS.

F. FIXTURE WHIPS SHALL NOT LAY ON THE CEILING TILES.

G. PROVIDE JUNCTION BOXES AS REQUIRED. PROVIDE ADDITIONAL FLEX WHIPS ABOVE JUNCTION BOXES TO EACH INDIVIDUAL FIXTURE EXCEPT WHERE CONTINUOUS ROWS AND FIXTURES LISTED FOR THROUGH WIRING. FLEX SHALL NOT EXCEED 6'-0" AND SHALL HAVE #12 AWG CONDUCTORS. FIXTURES SHALL NOT BE DAISY CHAINED.

H. PROVIDE #10 AWG HOMERUN CONDUCTORS FOR ALL 120 VOLT BRANCH CIRCUITS EXCEEDING 100 FEET IN LENGTH TO MINIMIZE VOLTAGE DROP.

I. EXTEND AN UNSWITCHED CONDUCTOR TO FIXTURES WITH EMERGENCY BATTERY BALLASTS AND TO EXIT LIGHTS.

KEYNOTE LEGEND

NO.	DESCRIPTION
E214	TYPICAL, FOR ALL PRIVATE OFFICES, CONFERENCE ROOMS, ROOMS USED PRIMARILY FOR PRINTING AND/OR COPY FUNCTIONS, BREAK ROOMS AND INDIVIDUAL WORKSTATIONS. RECEPTACLE SWITCH PACKS MOUNTED ABOVE CEILING. 120V, 20 AMP RATED RECEPTACLE POWER RELAY SHALL CONTROL THIS ROOM'S UPPER RECEPTACLES IN OUTLETS TO COMPLY WITH ASHRAE 90.1, 8.4.2. SEE POWER PLAN FOR AUTOMATIC RECEPTACLE CONTROL REQUIREMENTS. RECEPTACLES SHALL BE SWITCHED OFF BY ROOM VACANCY SENSOR WHEN ROOM IS VACANT. SEE DETAIL DRAWING FOR CONTROL SCHEMATICS. PROVIDE QUANTITY OF POWER PACKS AS REQUIRED.
E215	TYP, PANEL/CIRCUIT NUMBER SERVING LIGHT FIXTURES IN ROOM.
E216	TYPICAL, MOUNT FIXTURES IN ROOM AT 10'-0" AFF TO BOTTOM OF FIXTURE PROVIDE UNISTRUT AND ALL THREAD HANGER RODS AS REQUIRED TO SUPPORT FIXTURE FROM STRUCTURE.
E218	TYPICAL, CEILING MOUNTED EMERGENCY LIGHT.
E219	TYPICAL, ALL LIGHT FIXTURES WITHIN 15' OF WINDOW SHALL BE CONTROLLED (DIMMED) BY DAY LIGHT SENSOR/DIMMER MODULES. PROVIDE DAY LGIHT SENSORS, DIMMER MODULES, CONTROL WIRING AND ALL ACCESSORIES AS REQUIRED TO DIM LIGHT FIXTURES FOR DAY HARVESTING. ALL CONTROL/SENSOR COMPONENTS SHALL BE COMPATIBLE WITH FIXTURE LED AND DIMMERS DRIVERS.
E223	PROTECT AND MAINTAIN EXISTING LIGHT FIXTURE.
E224	PROVIDE NEW EXTERIOR WALL MOUNTED LIGHT FIXTURE. EXTEND EXISTING BLDG. EXTERIOR LIGHTING BRANCH CIRCUIT TO NEW LIGHT AS REQUIRED. FIELD VERIFY WORK SCOPE.
E225	REMOVE EXISTING LOWER LIGHT FIXTURE AND REPLACE WITH NEW LIGHT FIXTURE SHOWN.
E350	EXTEND SWITCH LIGHTING CIRCUIT TO ROOM EXHAUST FAN. PROVIDE WALL OCCUPANCY SENSOR TO CONTROL RESTROOM LIGHTS/FAN.
E355	PROVIDE ADDITIONAL 20 AMP, 120V OCCUPANCY SENSOR POWER PACKS TO CONTROL TOILET ROOM EXHAUST FAN. MEN'S AND WOMEN'S TOILET ROOM EXHAUST FAN POWER PACK CONTACTS SHALL BE WIRED IN PARALLEL SO THAT IF EITHER LIGHT/FAN SWITCH IS TURNED-ON IN THE MEN/WOMEN TOILET ROOM, THE EXHAUST FAN WILL TURN-ON.

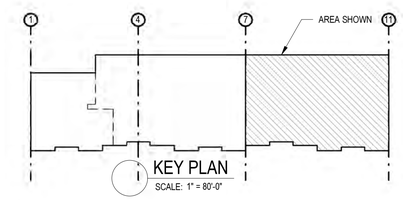

KEY PLAN

SCALE: 1" = 80'-0"

LONG & ASSOCIATES
architects | engineers, inc.
4525 South Manhattan Avenue, Tampa, FL 33611-2305
T813.839.0506 F813.839.4616 AA C001624 IB28 CGC1511025
www.longandassociates.com

THIS DOCUMENT IS COPYRIGHTED IN A TANGIBLE FORM. OWNERSHIP OF DOCUMENTS OF SERVICE IS RETAINED BY LONG & ASSOCIATES. REPRODUCTION OF THIS DOCUMENT WITHOUT WRITTEN PERMISSION IS PROHIBITED. ALL RIGHTS RESERVED.

HILLSBOROUGH COUNTY SHERIFF'S OFFICE

PINEBROOK BUILDING 4 INTERIOR RENOVATION

1220 - 1238 TECH BLVD.
TAMPA, FL 33619

Seal

ROBERT A. RACE II, P.E.
PE 51483

No.	Date	Issues & Revisions

TO THE BEST OF THE ARCHITECT'S AND/OR ENGINEER'S KNOWLEDGE THESE PLANS AND SPECIFICATIONS COMPLY WITH THE APPLICABLE MINIMUM BUILDING CODES AND THE APPLICABLE FIRE-SAFETY STANDARDS

Phase: 100% CONSTRUCTION DRAWINGS
Drawn By: JK
Checked By: RAR
Job No: 19002
Date: SEPTEMBER 20, 2019
9/19/2019 4:47:26 PM

PARTIAL LIGHTING PLAN

E2.2

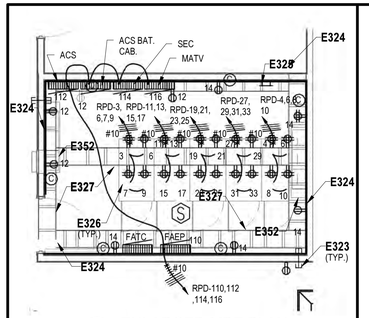

2 ENLARGED MDF PLAN

SCALE: 1/4" = 1'-0"

GENERAL EQUIPMENT SCHEDULE

NO.	STATUS	QTY	DESCRIPTION	COMMENTS
301	C	8	Laser_Printer_2-Bins_14511: 1	
305		2	F2550 - Shredder, Paper Heavy Duty: F2550 - Shredder, Paper Heavy Duty	
306	C	2	Copier_311: Copier_311	
309	C	1	Cash_Register-POS_4281: Cash_Register-POS_4281	
310	C	1	HP_Laser_Printer_-_Hewlett_Packard_DeskJet_2200_3707: 1	
311	C	1	Ultrasound_Machine_6885: Ultrasound_Machine_6885	
312	C	3	Dell_Color_Laser_Printer_5110cn_3303: 1	
313	C	2	Kitchen_Refrigerator-Kenmore-Top_Freezer_Refrigerator_with_Ice_Maker-18_ cu_ft: 18 cu.ft. Top Freezer Refrigerator - White	
314	C	1	Vending_Machine_-_Snacks_372: 1	
315	C	1	Vending_Machine_-_Soda_371: Beverage Dispenser	
316	C	1	Ice_Machine_7127: Ice_Machine_7127	
317	C	4	Copier_309: Copier_309	
321	C	7	Samsung_6_series_smartTV__Television__TV_13081: 60" ES6305U	
322	C	1	Projection Screen with parametric screen 4857: 12x10	

GENERAL NOTES

A. REFER TO THE SPECIFICATIONS, LEGEND AND GENERAL NOTES ON DRAWING E0.1.

B. COORDINATE ALL WORK WITH THE PROJECT AND PHASING SCHEDULES, OTHER TRADES AND THE OWNER.

C. U.L. LISTED ASSEMBLIES SHALL BE INSTALLED AT ALL PENETRATIONS OF RATED WALLS. JUNCTION BOXES LOCATED WITHIN RATED WALLS SHALL BE WRAPPED WITH FIRE STOP PUTTY PADS.

D. ALL WORK SHALL BE CONCEALED UNLESS OTHERWISE NOTED.

E. TYPICAL, LIGHT FIXTURES SHALL BE INDEPENDENTLY SUPPORTED FROM THE OVERHEAD STRUCTURE BY CEILING GRID TYPE WIRES CONNECTED TO TWO OPPOSITE CORNERS.

F. FIXTURE WHIPS SHALL NOT LAY ON THE CEILING TILES.

G. PROVIDE JUNCTION BOXES AS REQUIRED. PROVIDE ADDITIONAL FLEX WHIPS ABOVE JUNCTION BOXES TO EACH INDIVIDUAL FIXTURE EXCEPT WHERE CONTINUOUS ROWS AND FIXTURES LISTED FOR THROUGH WIRING. FLEX SHALL NOT EXCEED 6'-0" AND SHALL HAVE #12 AWG CONDUCTORS. FIXTURES SHALL NOT BE DAISY CHAINED.

H. PROVIDE #10 AWG HOMERUN CONDUCTORS FOR ALL 120 VOLT BRANCH CIRCUITS EXCEEDING 100 FEET IN LENGTH TO MINIMIZE VOLTAGE DROP.

I. EXTEND AN UNSWITCHED CONDUCTOR TO FIXTURES WITH EMERGENCY BATTERY BALLASTS AND TO EXIT LIGHTS.

J. SAWCUT AND PATCH EXISTING WALLS AS REQUIRED TO INSTALLED FLUSH MOUNTED OUTLETS SHOWN ON EXTERIOR WALLS.

KEYNOTE LEGEND

NO.	DESCRIPTION
E320	CEILING MOUNTED RECEPTACLE AND A/V OUTLET FOR CEILING PROJECTOR. COORDINATE LOCATION OF OUTLET BOX WITH PROJECTOR INSTALLER AND OWNER.
E321	A/V, POWER, SIGNAL AND DATA FLOOR BOX. FLOOR BOX, LEGRAND/WIREMOLD MODEL RFB4-SSFC, FOUR COMPARTMENT WITH POWER RECEPTACLES AND A/V BULKHEAD MOUNTING PLATE AND ACTIVATIONS FOR REQUIRED A/V SIGNAL CABLES. SEE RISER AND INSTALLATION DETAIL. 1 1/4" DIA A/V CONDUIT ROUTED TO A/V WALL BOX TO ENTER THROUGH BOTTOM. ARCHITECT TO SELECT STYLE AND MATERIAL FOR FINISH PLATE DURING SHOP DRAWING APPROVAL. SEE DETAIL #2 DRAWING E7.4.
E322	PROVIDE POWER AND DATA AND SIGNAL WALL BOX WITH POWER RECEPTACLE. BULKHEAD DEVICE PLATES AND OUTLET ACTIVATIONS. LEGRAND/WIREMOLD EVOLUTION SERIES EFSB4. COORDINATE MOUNTING HEIGHT AND LOCATION WITH WALL MOUNTED MONITOR SUPPORT BRACKETS SUCH THAT MONITOR CONCEALS BACKBOX FROM VIEW. ROUTE 1 1/4" CONDUIT STUB-UP ABOVE CEILING FOR SIGNAL CABLES AND 3/4" CONDUIT ABOVE CEILING FOR RECEPTACLE POWER CIRCUIT.
E323	PROVIDE THRU WALL CONDUITS AS REQUIRED FOR OWNER'S TELCOM CABLING. SEE SECTION #6 DWG E7.2 FOR ADDITIONAL REQUIREMENTS.
E324	PROVIDE 3/4" APA GRADE B/D PLUGGED PLYWOOD FROM 8" AFF TO CEIILING FOR BACKBOARD WITH TWO COATS OF FIRE RETARDANT PAINT ON ALL 6 SIDES OF PLYWOOD.
E325	TELECOMMUNICATIONS GROUND BUS BAR. SEE DETAIL #10, DWG E7.2.
E326	TYP. MOUNT RECEPTACLE OUTLET BOX TO SIDE OF LADDER TRAY ABOVE CENTER OF CABINET. EXTEND EMT CONDUIT ON SIDE OF LADDER TRAY FROM WALL TO RECEPTACLE OUTLET BOX. COORDINATE INSTALLATION OF OUTLET BOX WITH OWNER, AND RACK/CABINET INSTALLER.
E327	CABLE LADDER TRAY, SEE DRAWING E3.4 FOR ADDITIONAL REQUIREMENTS.
E342	PROVIDE 2-4" CONDUITS FROM EXISTING TELCO SERVICE CABINET ON BUILDING WALL EXTERIOR TO MDF ROOM 231. RUN CONDUITS ABOVE CEILING SPACE AND TERMINATE ABOVE CABLE TRAY IN MDF ROOM. PROVIDE PULL BOXES, AS REQUIRED, PULL STRINGS, AND CONDUIT END BUSHINGS. COORDINATE REQUIREMENTS WITH OWNER AND TELCO SERVICE PROVIDER. COORDINATE ROUTING WITH EXISTING AND NEW OBSTRUCTIONS.
E343	PROVIDE 2-4" CONDUITS FROM MDF ROOM 231 TO IDF ROOM 255. RUN CONDUITS ABOVE CEILING SPACE AND TERMINATE ABOVE CABLE TRAY IN BOTH ROOMS. PROVIDE PULL BOXES, AS REQUIRED, PULL STRINGS, AND CONDUIT END BUSHINGS. COORDINATE REQUIREMENTS WITH OWNER AND TELCO SERVICE PROVIDER. COORDINATE ROUTING WITH EXISTING AND NEW OBSTRUCTIONS.
E344	TYPICAL. TOP RECEPTACLES IN ALL PRIVATE OFFICES, CONFERENCE ROOMS, ROOMS USED PRIMARILY FOR PRINTING AND/OR COPY FUNCTIONS, BREAK ROOMS AND INDIVIDUAL WORKSTATIONS SHALL BE SWITCHED VIA ROOM VACANCY SENSOR POWER RELAY (SEE LIGHTING PLAN FOR VACANCY SENSOR/RECEPTACLE POWER RELAY). PER ASHRAE 90.1, 8.4.2. BOTTOM RECEPTACLE IN OUTLET IS NOT SWITCHED. HOMERUN SWITCHED RECEPTACLE CIRCUITS VIA POWER RELAY ABOVE CEILING. PROVIDE RELAYS AS REQUIRED. LABEL SWITCHED RECEPTACLE ON DEVICE AND COVERPLATE.
E346	PROVIDE NEMA-3R, HEAVY DUTY, 30 AMP NON-FUSED DISCONNECT SWITCH TO SERVE NEW AC UNIT. PROVIDE ENGRAVED PLASTIC LABEL ON SWITCH. PROVIDE FINAL CONNECTION TO UNIT WITH LIQUID TIGHT FLEXIBLE METAL CONDUIT PAINT EXPOSED CONDUIT TO MATCH WALL COLOR. ALL EXTERIOR EXPOSED CONDUIT ON WALL SHALL BE ALUMINUM. COORDINATE INSTALLATION WITH UNIT FIELD WIRING DRAWINGS AND INSTALLER. PROVIDE ALL WIRING AND CONDUIT AS REQUIRED. PROVIDE UNISTRUT SUPPORTS AS REQUIRED.
E347	TYPICAL, FIELD LOCATE DISCONNECT, POWER AND CONTROL ROUGH-IN LOCATIONS WITH EQUIPMENT SHOP DRAWINGS FOR CONDENSING UNIT PANEL. SEAL ALL CONDUIT OPENINGS WITH DUCT PUTTY TO PREVENT AIR TRANSFER.
E348	PROVIDE 3-#8, #10 EGC IN 1" CND
E349	PROVIDE MOTOR RATED SWITCH SERVING NEW AC FAN. COORDINATE FIELD WIRING REQUIREMENTS WITH SHOP DRAWINGS AND INSTALLER. LABEL SWITCH ACCORDINGLY.
E351	CIRCUIT EXHAUST FAN TO ROOM LIGHT SWITCH
E352	PACKAGE A/C UNIT ON WALL ABOVE CABLE TRAY.
E357	COORDINATE TELCO (FRONTIER, SPECTRUM OR OTHERS) SERVICE PROVIDER'S CABLE EXTENSION TO CABINET TO SERVE BLDG. COORDINATE SERVICE PROVIDER'S CABLE CONNECTION TO BLDG WITH TENNANT AND OWNER.
E358	PROVIDE PROJECTOR SCREEN J-BOX AND SWITCH. COORDINATE EXACT LOCATION AND MOUNTING HEIGHT WITH PROJECTOR SCREEN INSTALLER.

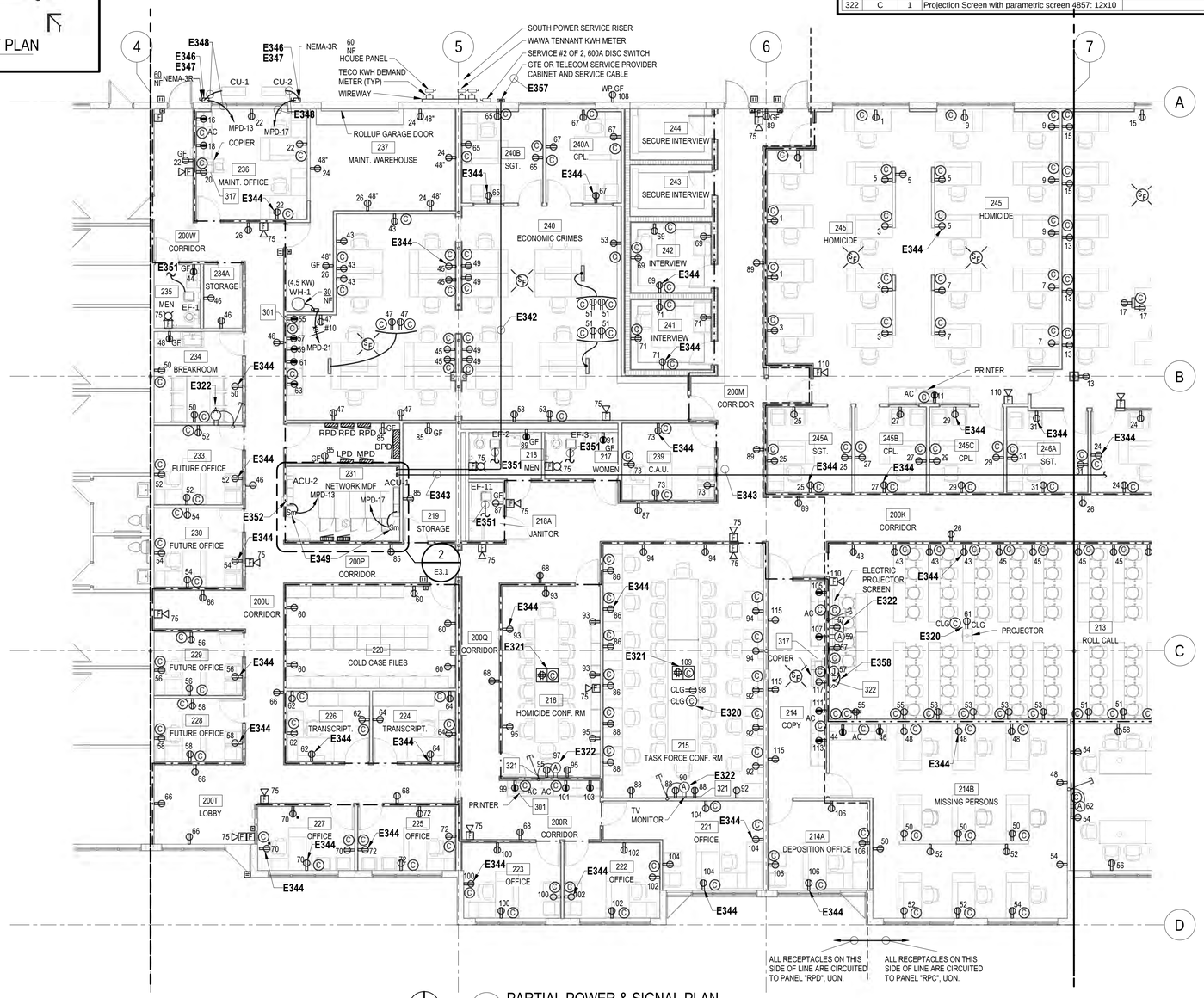

N 1 PARTIAL POWER & SIGNAL PLAN

SCALE: 1/8" = 1'-0"

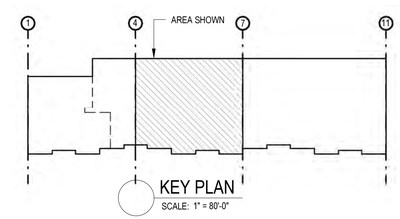

KEY PLAN

SCALE: 1" = 80'-0"

LONG & ASSOCIATES
architects | engineers, inc.
4525 South Manhattan Avenue, Tampa, FL 33611-2305
T:813.839.0506 F:813.839.4616 AA C001624 IB28 CGC1511025
www.longandassociates.com

THIS DOCUMENT IS COPYRIGHTED BY LONG & ASSOCIATES, ARCHITECTS | ENGINEERS, INC. REPRODUCTION OR DISTRIBUTION WITHOUT EXPRESS WRITTEN CONSENT OF LONG & ASSOCIATES IS PROHIBITED. ALL RIGHTS RESERVED.

HILLSBOROUGH COUNTY SHERIFF'S OFFICE

PINEBROOK BUILDING 4 INTERIOR RENOVATION

1220 - 1238 TECH BLVD.
TAMPA, FL 33619

Seal

ROBERT A. RACE II, P.E.
PE 51483

No.	Date	Issues & Revisions

TO THE BEST OF THE ARCHITECT'S AND/OR ENGINEER'S KNOWLEDGE THESE PLANS AND SPECIFICATIONS COMPLY WITH THE APPLICABLE MINIMUM BUILDING CODES AND THE APPLICABLE FIRE-SAFETY STANDARDS

Phase: 100% CONSTRUCTION DRAWINGS
Drawn By: JK
Checked By: RAR
Job No: 19002
Date: SEPTEMBER 20, 2019
9/19/2019 4:47:35 PM

PARTIAL POWER & SIGNAL PLAN

E3.1

GENERAL EQUIPEMNT SCHEDULE

NO.	STATUS	QTY	DESCRIPTION	COMMENTS
301	C	8	Laser_Printer_2-Bins_14511: 1	
305		2	F2550 - Shredder, Paper Heavy Duty: F2550 - Shredder, Paper Heavy Duty	
306	C	2	Copier_311: Copier_311	
309	C	1	Cash_Register-POS_4281: Cash_Register-POS_4281	
310	C	1	HP_Laser_Printer_-_Hewlett_Packard_DeskJet_2200_3707: 1	
311	C	1	Ultrasound_Machine_6885: Ultrasound_Machine_6885	
312	C	3	Dell_Color_Laser_Printer_5110cn_3303: 1	
313	C	2	Kitchen_Refrigerator-Kenmore-Top_Freezer_Refrigerator_with_Ice_Maker-18_ cu_ft: 18 cu.ft. Top Freezer Refrigerator - White	
314	C	1	Vending_Machine_-_Snacks_372: 1	
315	C	1	Vending_Machine_-_Soda_371: Beverage Dispenser	
316	C	1	Ice_Machine_7127: Ice_Machine_7127	
317	C	4	Copier_309: Copier_309	
321	C	7	Samsung_6_series_smartTV__Television__TV_13081: 60" ES6305U	
322	C	1	Projection Screen with parametric screen 4857: 12x10	

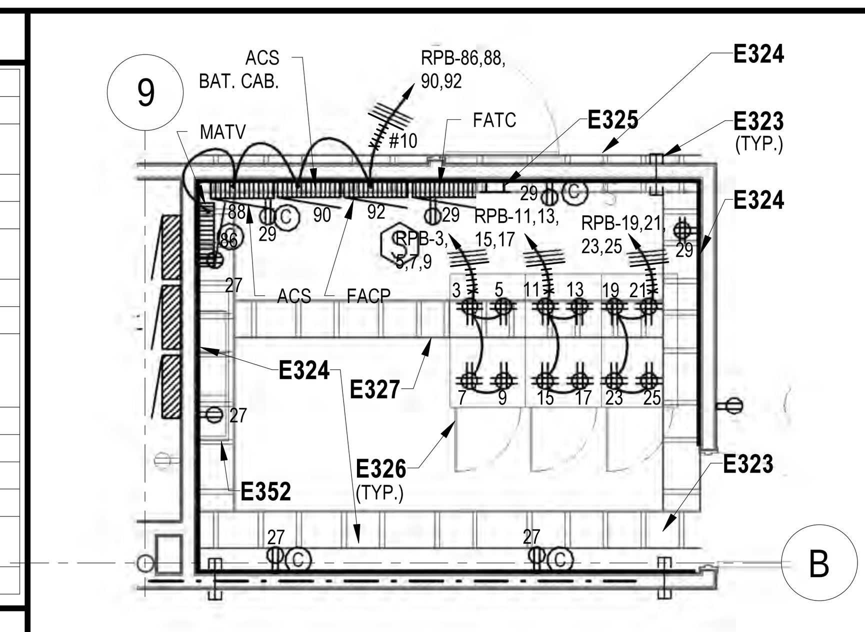

2 ENLARGED IDF PLAN
SCALE: 1/4" = 1'-0"

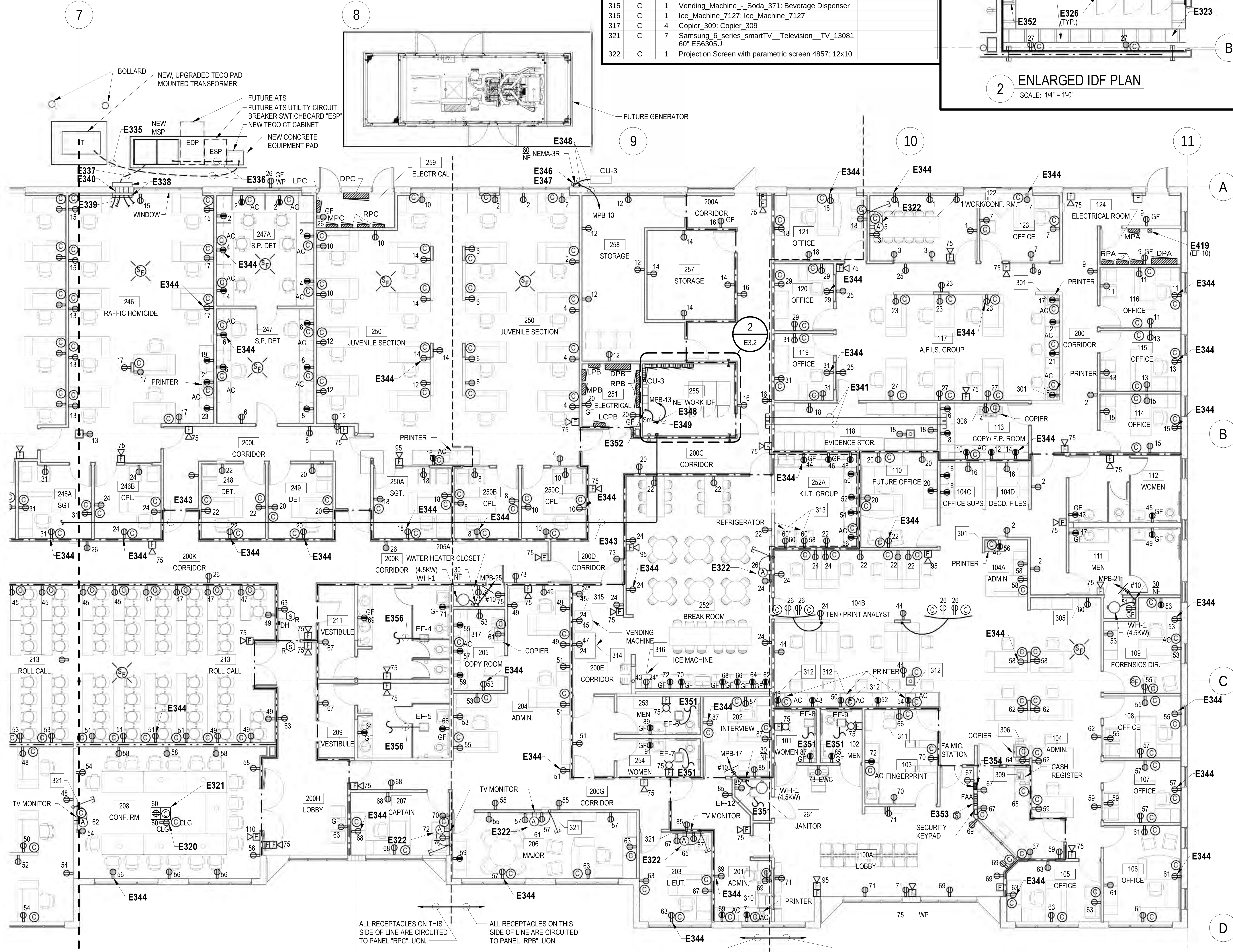

1 PARTIAL POWER & SIGNAL PLAN
SCALE: 1/8" = 1'-0"

GENERAL NOTES

A. REFER TO THE SPECIFICATIONS, LEGEND AND GENERAL NOTES ON DRAWING E0.1.

B. COORDINATE ALL WORK WITH THE PROJECT AND PHASING SCHEDULES, OTHER TRADES AND THE OWNER.

C. U.L. LISTED ASSEMBLIES SHALL BE INSTALLED AT ALL PENETRATIONS OF RATED WALLS. JUNCTION BOXES LOCATED WITHIN RATED WALLS SHALL BE WRAPPED WITH FIRE STOP PUTTY PADS.

D. ALL WORK SHALL BE CONCEALED UNLESS OTHERWISE NOTED.

E. TYPICAL, LIGHT FIXTURES SHALL BE INDEPENDENTLY SUPPORTED FROM THE OVERHEAD STRUCTURE BY CEILING GRID TYPE WIRES CONNECTED TO TWO OPPOSITE CORNERS.

F. FIXTURE WHIPS SHALL NOT LAY ON THE CEILING TILES.

G. PROVIDE JUNCTION BOXES AS REQUIRED. PROVIDE ADDITIONAL FLEX WHIPS ABOVE JUNCTION BOXES TO EACH INDIVIDUAL FIXTURE EXCEPT WHERE CONTINUOUS ROWS AND FIXTURES LISTED FOR THROUGH WIRING. FLEX SHALL NOT EXCEED 6'-0" AND SHALL HAVE #12 AWG CONDUCTORS. FIXTURES SHALL NOT BE DAISY CHAINED.

H. PROVIDE #10 AWG HOMERUN CONDUCTORS FOR ALL 120 VOLT BRANCH CIRCUITS EXCEEDING 100 FEET IN LENGTH TO MINIMIZE VOLTAGE DROP.

I. EXTEND AN UNSWITCHED CONDUCTOR TO FIXTURES WITH EMERGENCY BATTERY BALLASTS AND TO EXIT LIGHTS.

J. SAWCUT AND PATCH EXISTING WALLS AS REQUIRED TO INSTALLED FLUSH MOUNTED OUTLETS SHOWN ON EXTERIOR WALLS.

KEYNOTE LEGEND

NO.	DESCRIPTION
E320	CEILING MOUNTED RECEPTACLE AND A/V OUTLET FOR CEILING PROJECTOR. COORDINATE LOCATION OF OUTLET BOX WITH PROJECTOR INSTALLER AND OWNER.
E321	A/V, POWER, SIGNAL AND DATA FLOOR BOX. FLOOR BOX, LEGRAND/WIREMOLD MODEL RFB4-SSFC, FOUR COMPARTMENT WITH POWER RECEPTACLES AND A/V BULKHEAD MOUNTING PLATE AND ACTIVATIONS FOR REQUIRED A/V SIGNAL CABLES. SEE RISER AND INSTALLATION DETAIL. 1 1/4' DIA A/V CONDUIT ROUTED TO A/V WALL BOX TO ENTER THROUGH BOTTOM. ARCHITECT TO SELECT STYLE AND MATERIAL FOR FINISH PLATE DURING SHOP DRAWING APPROVAL. SEE DETAIL #2 DRAWING E7.4.
E322	PROVIDE POWER AND DATA AND SIGNAL WALL BOX WITH POWER RECEPTACLE. BULKHEAD DEVICE PLATES AND OUTLET ACTIVATIONS. LEGRAND/WIREMOLD EVOLUTION SERIES EFSB4. COORDINATE MOUNTING HEIGHT AND LOCATION WITH WALL MOUNTED MONITOR SUPPORT BRACKETS SUCH THAT MONITOR CONCEALS BACKBOX FROM VIEW. ROUTE 1 1/4" CONDUIT STUB-UP ABOVE CEILING FOR SIGNAL CABLES AND 3/4" CONDUIT ABOVE CEILING FOR RECEPTACLE POWER CIRCUIT.
E323	PROVIDE THRU WALL CONDUITS AS REQUIRED FOR OWNER'S TELCOM CABLING. SEE SECTION #6 DWG E7.2 FOR ADDITIONAL REQUIREMENTS.
E324	PROVIDE 3/4" APA GRADE B/D PLUGGED PLYWOOD FROM 8" AFF TO CEILING FOR BACKBOARD WITH TWO COATS OF FIRE RETARDANT PAINT ON ALL 6 SIDES OF PLYWOOD.
E325	TELECOMMUNICATIONS GROUND BUS BAR. SEE DETAIL #10, DWG E7.2.
E326	TYP, MOUNT RECEPTACLE OUTLET BOX TO SIDE OF LADDER TRAY ABOVE CENTER OF CABINET. EXTEND EMT CONDUIT ON SIDE OF LADDER TRAY FROM WALL TO RECEPTACLE OUTLET BOX. COORDINATE INSTALLATION OF OUTLET BOX WITH OWNER, AND RACK/CABINET INSTALLER.
E327	CABLE LADDER TRAY, SEE DRAWING E3.4 FOR ADDITIONAL REQUIREMENTS.
E335	NEW SERVICE LATERAL CIRCUIT. SEE RISER FOR CIRCUIT REQUIREMENTS. SAWCUT/PATCH ASPHALT PARKING LOT AS REQUIRED. COORDINATE POWER BUILDING OUTAGE REQUIRED TO CONNECT NEW SERVICE LATERAL CONDUCTORS TO TECO TRANSFORMER WIT HCSO TENNANT, BUILDING OWNER, WAWA TENNANT, CONSTRUCTION MANAGER, PROJECT ENGINEER AND TECO.
E336	NEW SERVICE LATERAL. SAWCUT/PATCH ASPHALT AS REQUIRED TO INSTALL ALL UNDERGROUND CONDUITS.
E337	NEW FEEDER CIRCUITS TO WALL MOUNTED PULLBOXES.
E338	NEW FEEDER CIRCUIT PULLBOXES (SIZE AS REQUIRED.)
E339	TYP, COORDINATE ROUTING OF NEW PANELBOARD FEEDER CIRCUITS ABOVE CEILINGS TO RESPECTIVE DISTRIBUTION PANELBOARDS.
E340	BORE HOLES IN EXISTING WALL AS REQUIRED TO INSTALL NEW CONDUITS. SEAL ALL WALL PENETRATIONS WATERTIGHT.
E341	2- 4" CONDUIT PATHWAY TO TRANSITION DATA CABLES FROM IDF ROOM 255 TO ABOVE CEILING OF COPY ROOM
E343	PROVIDE 2-4" CONDUITS FROM MDF ROOM 231 TO IDF ROOM 255. RUN CONDUITS ABOVE CEILING SPACE AND TERMINATE ABOVE CABLE TRAY IN BOTH ROOMS. PROVIDE PULL BOXES, AS REQUIRED, PULL STRINGS, AND CONDUIT END BUSHINGS. COORDINATE REQUIREMENTS WITH OWNER AND TELCO SERVICE PROVIDER. COORDINATE ROUTING WITH EXISTING AND NEW OBSTRUCTIONS.
E344	TYPICAL, TOP RECEPTACLES IN ALL PRIVATE OFFICES, CONFERENCE ROOMS, ROOMS USED PRIMARILY FOR PRINTING AND/OR COPY FUNCTIONS, BREAK ROOMS AND INDIVIDUAL WORKSTATIONS SHALL BE SWITCHED VIA ROOM VACANCY SENSOR POWER RELAY (SEE LIGHTING PLAN FOR VACANCY SENSOR/RECEPTACLE POWER RELAY). PER ASHRAE 90.1, 8.4.2. BOTTOM RECEPTACLE IN OUTLET IS NOT SWITCHED. HOMERUN SWITCHED RECEPTACLE CIRCUITS VIA POWER RELAY ABOVE CEILING. PROVIDE RELAYS AS REQUIRED. LABEL SWITCHED RECEPTACLE ON DEVICE AND COVERPLATE.
E346	PROVIDE NEMA-3R, HEAVY DUTY, 30 AMP NON-FUSED DISCONNECT SWITCH TO SERVE NEW AC UNIT. PROVIDE ENGRAVED PLASTIC LABEL ON SWITCH. PROVIDE FINAL CONNECTION TO UNIT WITH LIQUID TIGHT FLEXIBLE METAL CONDUIT PAINT EXPOSED CONDUIT TO MATCH WALL COLOR. ALL EXTERIOR EXPOSED CONDUIT ON WALL SHALL BE ALUMINUM. COORDINATE INSTALLATION WITH UNIT FIELD WIRING DRAWINGS AND INSTALLER. PROVIDE ALL WIRING AND CONDUIT AS REQUIRED. PROVIDE UNISTRUT SUPPORTS AS REQUIRED.
E347	TYPICAL, FIELD LOCATE DISCONNECT, POWER AND CONTROL ROUGH-IN LOCATIONS WITH EQUIPMENT SHOP DRAWINGS FOR CONDENSING UNIT PANEL. SEAL ALL CONDUIT OPENINGS WITH DUCT PUTTY TO PREVENT AIR TRANSFER.
E348	PROVIDE 3-#8, #10 EGC IN 1" CND
E349	PROVIDE MOTOR RATED SWITCH SERVING NEW AC FAN. COORDINATE FIELD WIRING REQUIREMENTS WITH SHOP DRAWINGS AND INSTALLER. LABEL SWITCH ACCORDINGLY.
E351	CIRCUIT EXHAUST FAN TO ROOM LIGHT SWITCH
E352	PACKAGE A/C UNIT ON WALL ABOVE CABLE TRAY.
E353	PROVIDE NEW FLUSH MOUNTED FIRE ALARM ANNUNCIATOR. PATCH/PAINT WALL AS REQUIRED.
E354	FIRE ALARM RECESSED MOUNTED VOICE EVACUATION MICROPHONE STATION WITH LOCKABLE CABINET COVER TO READ "FIRE ALARM MICROPHONE STATION".
E356	CIRCUIT EXHAUST FAN TO LIGHTING CONTROL POWER PACK CONTACT SERVING ROOM.
E419	PROVIDE INDIVIDUAL FULL-VOLTAGE NEMA SIZE "0" STARTER WITH GREEN LED "RUN" LIGHT, 120V COIL, TOV, 120V CONTROL TRANSFORMER WITH FUSES AND NEMA-1 ENCLOSURE, CONTROL BY EMCS RELAYS. SEE PANELBOARDS FOR BRANCH CIRCUIT INFORMATION.

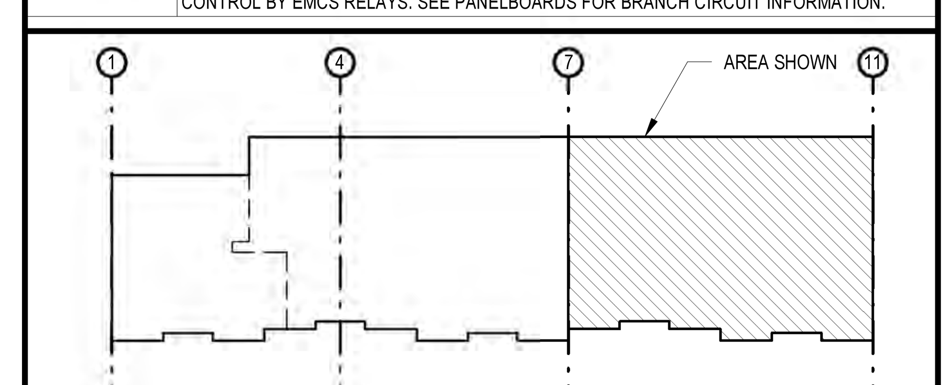

KEY PLAN
SCALE: 1" = 80'-0"

LONG & ASSOCIATES
architects | engineers, inc.
4525 South Manhattan Avenue, Tampa, FL 33611-2305
T:813.839.0506 F:813.839.4616 AAC001624 1828 CGC1511025
www.longandassociates.com

THIS DOCUMENT IS COPYRIGHT MATERIAL, ANY DISCLOSURE, UNAUTHORIZED USE, DISSEMINATION OR DUPLICATION WITHOUT THE EXPRESS WRITTEN CONSENT OF LONG & ASSOCIATES IS PROHIBITED ALL RIGHTS RESERVED

HILLSBOROUGH COUNTY SHERIFF'S OFFICE

PINEBROOK BUILDING 4 INTERIOR RENOVATION

1220 - 1238 TECH BLVD.
TAMPA, FL 33619

Seal

ROBERT A. RACE II, P.E.
PE 51483

No.	Date	Issues & Revisions

TO THE BEST OF THE ARCHITECT'S AND/OR ENGINEER'S KNOWLEDGE THESE PLANS AND SPECIFICATIONS COMPLY WITH THE APPLICABLE MINIMUM BUILDING CODES AND THE APPLICABLE FIRE-SAFETY STANDARDS

Phase: 100% CONSTRUCTION DRAWINGS
Drawn By: JK
Checked By: RAR
Job No: 19002
Date: SEPTEMBER 20, 2019
9/19/2019 4:47:48 PM

PARTIAL POWER & SIGNAL PLAN

E3.2

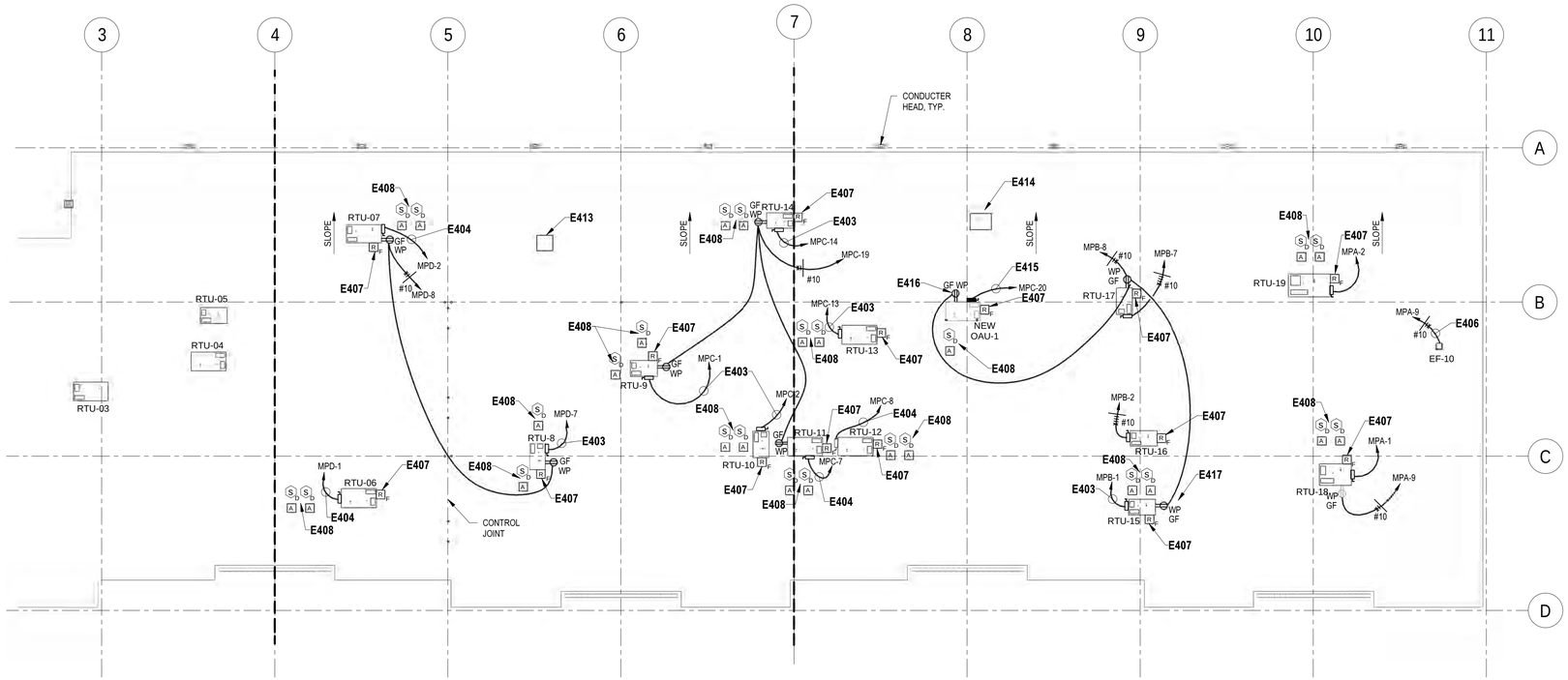

N 1 OVERALL ROOF ELECTRICAL PLAN

SCALE: 1/16" = 1'-0"

0' 4' 8' 16'

GENERAL NOTES

A. REFER TO THE SPECIFICATIONS, LEGEND AND GENERAL NOTES ON DRAWING E0.1.

B. COORDINATE ALL WORK WITH THE PROJECT AND PHASING SCHEDULES, OTHER TRADES AND THE OWNER.

C. U.L. LISTED ASSEMBLIES SHALL BE INSTALLED AT ALL PENETRATIONS OF RATED WALLS. JUNCTION BOXES LOCATED WITHIN RATED WALLS SHALL BE WRAPPED WITH FIRE STOP PUTTY PADS.

D. ALL WORK SHALL BE CONCEALED UNLESS OTHERWISE NOTED.

E. TYPICAL, LIGHT FIXTURES SHALL BE INDEPENDENTLY SUPPORTED FROM THE OVERHEAD STRUCTURE BY CEILING GRID TYPE WIRES CONNECTED TO TWO OPPOSITE CORNERS.

F. FIXTURE WHIPS SHALL NOT LAY ON THE CEILING TILES.

G. PROVIDE JUNCTION BOXES AS REQUIRED. PROVIDE ADDITIONAL FLEX WHIPS ABOVE JUNCTION BOXES TO EACH INDIVIDUAL FIXTURE EXCEPT WHERE CONTINUOUS ROWS AND FIXTURES LISTED FOR THROUGH WIRING. FLEX SHALL NOT EXCEED 6'-0" AND SHALL HAVE #12 AWG CONDUCTORS. FIXTURES SHALL NOT BE DAISY CHAINED.

H. PROVIDE #10 AWG HOMERUN CONDUCTORS FOR ALL 120 VOLT BRANCH CIRCUITS EXCEEDING 100 FEET IN LENGTH TO MINIMIZE VOLTAGE DROP.

I. EXTEND AN UNSWITCHED CONDUCTOR TO FIXTURES WITH EMERGENCY BATTERY BALLASTS AND TO EXIT LIGHTS.

J. FIELD VERIFY EXISTING DEVICES AND EQUIPMENT THAT SHOWN FOR REFERENCE. NOT ALL MAY BE SHOWN. VERIFY SOURCE OF POWER AND SIGNAL SYSTEMS.

K. TAG OUT AND LOCK OUT ALL CIRCUITS DURING WORK. WORK ON LIVE PANELBOARDS IS NOT AUTHORIZED. COORDINATE ALL POWER OUTAGES WITH THE OWNER WHILE CONTINUING OPERATIONS IN THE BUILDING.

M. COORDINATE WITH OWNER, CM AND TENANT FOR ACCESS HOURS AND SECURITY REQUIREMENTS.

KEYNOTE LEGEND

NO.	DESCRIPTION
E403	PROVIDE 3-#8, #10 EGC IN 1" CND.
E404	PROVIDE 3-#6, #8 EGC IN 1" CND.
E406	HOMERUN FAN BRANCH CIRCUIT VIA CONTACTOR SHOWN IN ELECTRICAL ROOM.
E407	TYPICAL, INSTALL FIRE ALARM SHUTDOWN RELAY INSIDE RTU CONTROL ENCLOSURE. INSTALL LABEL ON COVER TO READ "FIRE ALARM SHUTDOWN RELAY INSIDE."
E408	TYPICAL, DUCT SMOKE DETECTORS FOR ROOF TOP UNIT LOCATED IN DUCTWORK BELOW CEILING. COORDINATE EXACT LOCATION WITH MECHANICAL DWGS AND DUCTWORK INSTALLER. FLUSH MOUNT DUCT DETECTOR REMOTE TEST STATIONS IN CEILING TILE DIRECTLY BELOW DUCT DETECTOR AND PROVIDE LABEL ON TEST STATION COVER.
E413	EXHAUST FAN TO BE REMOVED, REMOVE BRANCH CIRCUIT BACK TO SOURCE.
E414	DUCTLESS A/C MINI-SPLIT CONDENSER UNIT TO BE REMOVED. REMOVE BRANCH CIRCUIT BACK TO SOURCE PANEL.
E415	PROVIDE 3-#3, #8 EGC IN 1 1/4" CND. ROUTE ALL CONDUITS (POWER, FIRE ALARM AND CONTROL CIRCUITS) WITHIN ROOT CURB AND INSIDE UNIT. COORDINATE CONDUIT ROUTING IN UNIT WITH UNIT SHOP DRAWINGS AND MECHANICAL SUBCONTRACTOR.
E416	PROVIDE NEW RECEPTACLE OUTLET MOUNTED TO SIDE OF UNIT WITH "WHILE-IN-USE" METALLIC COVER COORDINATE MOUNTING LOCATION ON UNIT WITH EQUIPMENT INSTALLER.
E417	TYP. REPLACE ALL EXISTING SERVICE RECEPTACLES WITH NEW 20A, GFI, WP, WR LISTED RECEPTACLES AND REPLACE ALL OUTLET COVERS WITH "WHILE-IN-USE" METALLIC COVERS. PROVIDE RECEPTACLE BRANCH CIRCUIT NUMBER INSIDE COVER ON BOTTOM OF OUTLET.

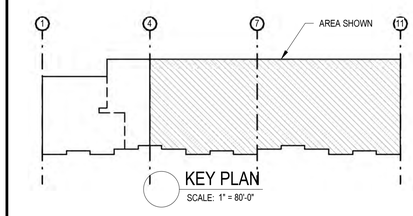

KEY PLAN

SCALE: 1" = 80'-0"

LONG & ASSOCIATES
architects | engineers, inc.
4525 South Manhattan Avenue, Tampa, FL 33611-2305
T813.839.0506 F813.839.4616 AA C001624 IB28 CGC1511025
www.longandassociates.com

THIS DOCUMENT IS COPYRIGHTED IN A NOTE COVERS OWNERSHIP OF DOCUMENTS OR DESIGN REPORTS EXPRESS WRITTEN CONSENT OF LONG & ASSOCIATES FOR REUSE OR ALTERATION RESERVED

HILLSBOROUGH COUNTY SHERIFF'S OFFICE

PINEBROOK BUILDING 4 INTERIOR RENOVATION

1220 - 1238 TECH BLVD.
TAMPA, FL 33619

Seal

ROBERT A. RACE II, P.E.
PE 51483

No.	Date	Issues & Revisions

TO THE BEST OF THE ARCHITECT'S AND/OR ENGINEER'S KNOWLEDGE THESE PLANS AND SPECIFICATIONS COMPLY WITH THE APPLICABLE MINIMUM BUILDING CODES AND THE APPLICABLE FIRE-SAFETY STANDARDS

Phase: 100% CONSTRUCTION DRAWINGS
Drawn By: JK
Checked By: RAR
Job No: 19002
Date: SEPTEMBER 20, 2019
9/19/2019 4:47:52 PM

OVERALL ROOF ELECTRICAL PLAN

E3.3

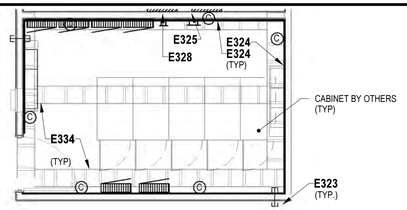

2 ENLARGED MDF PLAN
SCALE: 1/4" = 1'-0"

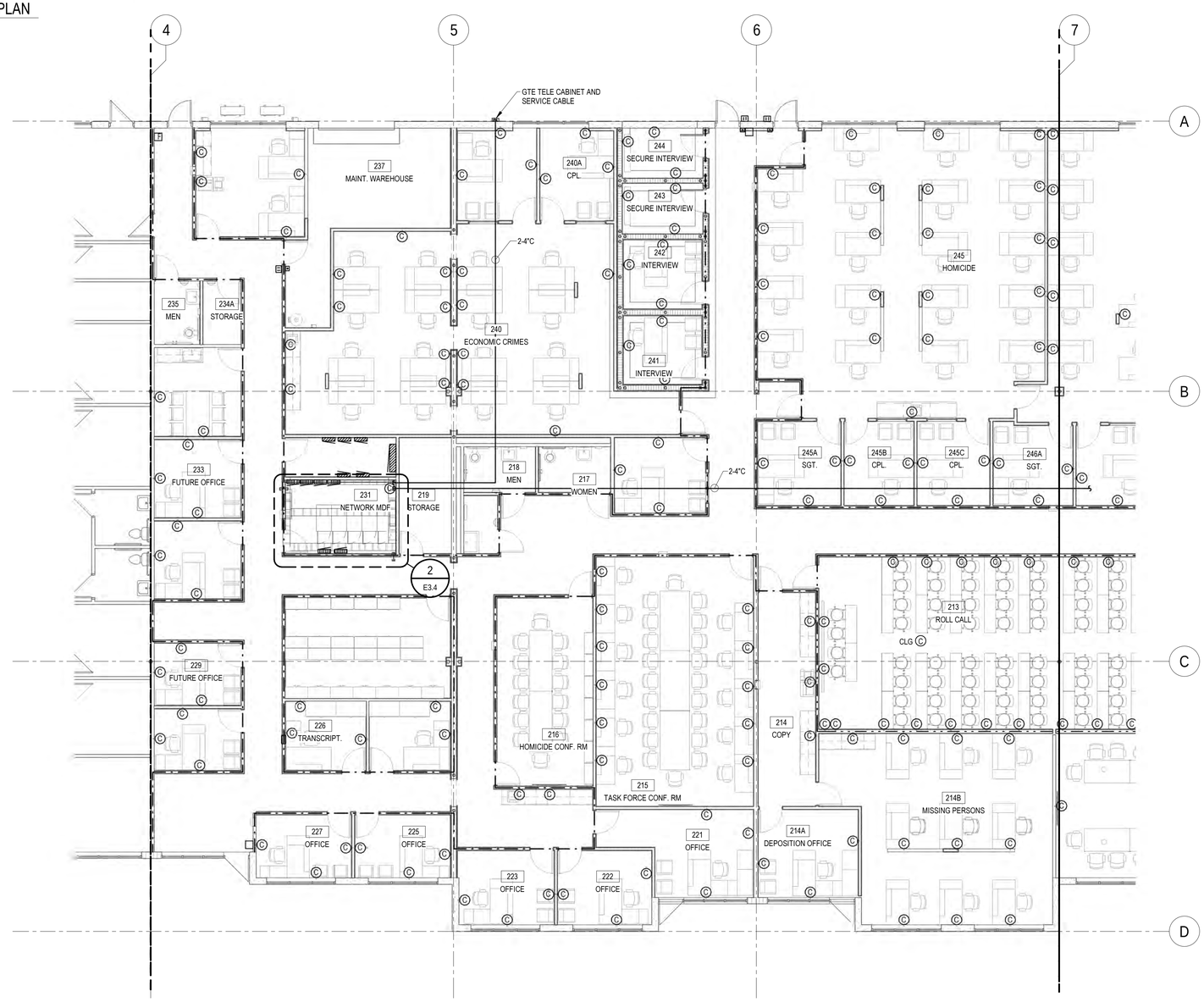

1 PARTIAL TELECOM PLAN
SCALE: 1/8" = 1'-0"

GENERAL NOTES

A. REFER TO THE SPECIFICATIONS, LEGEND AND GENERAL NOTES ON DRAWING E0.1.

B. COORDINATE ALL WORK WITH THE PROJECT AND PHASING SCHEDULES, OTHER TRADES AND THE OWNER.

C. U.L. LISTED ASSEMBLIES SHALL BE INSTALLED AT ALL PENETRATIONS OF RATED WALLS. JUNCTION BOXES LOCATED WITHIN RATED WALLS SHALL BE WRAPPED WITH FIRE STOP PUTTY PADS.

D. ALL WORK SHALL BE CONCEALED UNLESS OTHERWISE NOTED.

E. LOCATIONS OF SYMBOLS ON THE FLOOR PLANS ARE AN APPROXIMATION TO ACTUAL DEVICE LOCATIONS. COORDINATE FINAL LOCATIONS WITH OTHER ELEMENTS IN THE VICINITY.

F. VOICE/DATA/TV OUTLETS SHALL BE INSTALLED WITHIN 6 INCHES TO A POWER OUTLET INDICATED IN THE ELECTRICAL DRAWINGS.

KEYNOTE LEGEND

NO.	DESCRIPTION
E323	PROVIDE THRU WALL CONDUITS AS REQUIRED FOR OWNER'S TELCOM CABLING. SEE SECTION #6 DWG E7.2 FOR ADDITIONAL REQUIREMENTS.
E324	PROVIDE 3/4" APA GRADE B/D PLUGGED PLYWOOD FROM 8" AFF TO CEILING FOR BACKBOARD WITH TWO COATS OF FIRE RETARDANT PAINT ON ALL 6 SIDES OF PLYWOOD.
E325	TELECOMMUNICATIONS GROUND BUS BAR. SEE DETAIL #10, DWG E7.2.
E328	TELEPHONE PUNCHDOWN BLOCKS WITH SURGE MODULES. (BY OTHERS)
E334	12" TUBULAR LADDER TRAY MOUNTED AT 12" ABOVE CABINET. PROVIDE WITH RUNWAY ELEVATION KIT, AND SUPPORT EVERY 5 FEET.

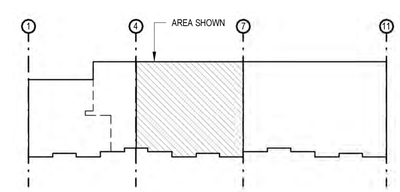

KEY PLAN
SCALE: 1" = 80'-0"

LONG & ASSOCIATES
architects | engineers, inc.
4525 South Manhattan Avenue, Tampa, FL 33611-2305
T813.839.0506 F813.839.4616 AAC0010624 IB28 CGC1511025
www.longandassociates.com

THIS DOCUMENT IS COPYRIGHTED MATERIAL AND THEREFORE IS DISTRIBUTED FOR INFORMATION ONLY. REPRODUCTIONS WITHOUT WRITTEN CONSENT OF LONG & ASSOCIATES FORFEIT ALL RIGHTS. ALL RIGHTS RESERVED.

HILLSBOROUGH COUNTY SHERIFF'S OFFICE

PINEBROOK BUILDING 4 INTERIOR RENOVATION

1220 - 1238 TECH BLVD.
TAMPA, FL 33619

Seal

ROBERT A. RACELI, P.E.
PE 51483

No.	Date	Issues & Revisions

TO THE BEST OF THE ARCHITECT'S AND/OR ENGINEER'S KNOWLEDGE THESE PLANS AND SPECIFICATIONS COMPLY WITH THE APPLICABLE MINIMUM BUILDING CODES AND THE APPLICABLE FIRE-SAFETY STANDARDS

Phase: 100% CONSTRUCTION DRAWINGS
Drawn By: WM
Checked By: RAR
Job No: 19002
Date: SEPTEMBER 20, 2019
9/19/2019 4:47:58 PM

PARTIAL TELECOM PLAN

E3.4

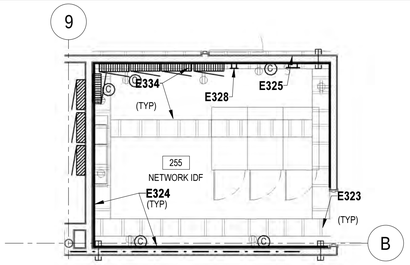

2 ENLARGED IDF PLAN
SCALE: 1/4" = 1'-0"

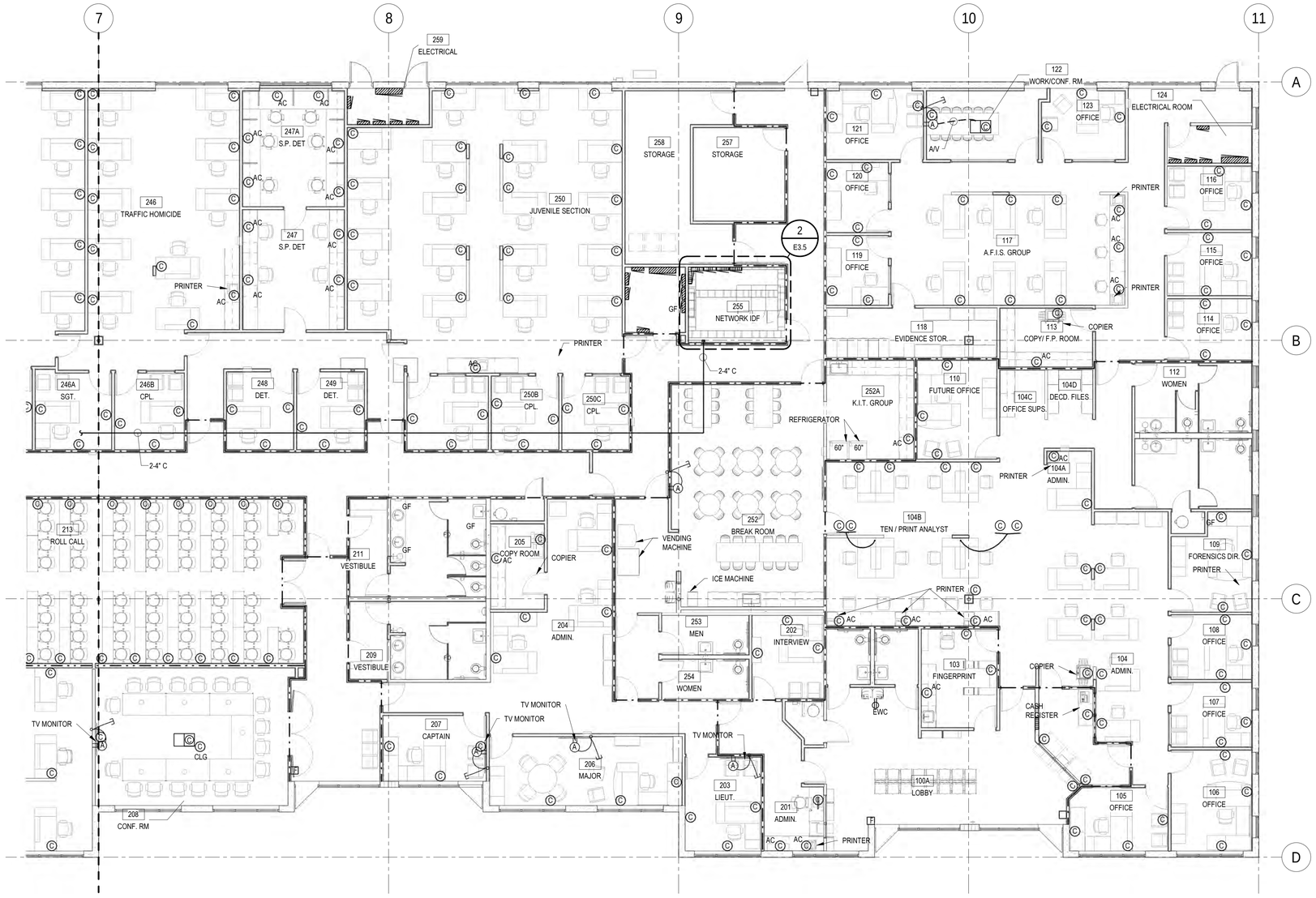

1 PARTIAL TELECOM PLAN
SCALE: 1/8" = 1'-0"

GENERAL NOTES

A. REFER TO THE SPECIFICATIONS, LEGEND AND GENERAL NOTES ON DRAWING E0.1.

B. COORDINATE ALL WORK WITH THE PROJECT AND PHASING SCHEDULES, OTHER TRADES AND THE OWNER.

C. U.L. LISTED ASSEMBLIES SHALL BE INSTALLED AT ALL PENETRATIONS OF RATED WALLS. JUNCTION BOXES LOCATED WITHIN RATED WALLS SHALL BE WRAPPED WITH FIRE STOP PUTTY PADS.

D. ALL WORK SHALL BE CONCEALED UNLESS OTHERWISE NOTED.

E. LOCATIONS OF SYMBOLS ON THE FLOOR PLANS ARE AN APPROXIMATION TO ACTUAL DEVICE LOCATIONS. COORDINATE FINAL LOCATIONS WITH OTHER ELEMENTS IN THE VICINITY.

F. VOICE/DATA/TV OUTLETS SHALL BE INSTALLED WITHIN 6 INCHES TO A POWER OUTLET INDICATED IN THE ELECTRICAL DRAWINGS.

KEYNOTE LEGEND

NO.	DESCRIPTION
E323	PROVIDE THRU WALL CONDUITS AS REQUIRED FOR OWNER'S TELCOM CABLING. SEE SECTION #6 DWG E7.2 FOR ADDITIONAL REQUIREMENTS.
E324	PROVIDE 3/4" APA GRADE B/D PLUGGED PLYWOOD FROM 8" AFF TO CEILING FOR BACKBOARD WITH TWO COATS OF FIRE RETARDANT PAINT ON ALL 6 SIDES OF PLYWOOD.
E325	TELECOMMUNICATIONS GROUND BUS BAR. SEE DETAIL #10, DWG E7.2.
E328	TELEPHONE PUNCHDOWN BLOCKS WITH SURGE MODULES. (BY OTHERS)
E334	12" TUBULAR LADDER TRAY MOUNTED AT 12" ABOVE CABINET. PROVIDE WITH RUNWAY ELEVATION KIT, AND SUPPORT EVERY 5 FEET.

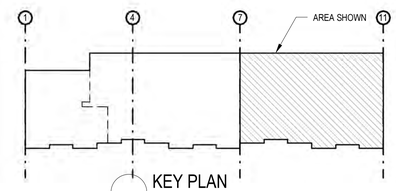

KEY PLAN
SCALE: 1" = 80'-0"

LONG & ASSOCIATES
architects | engineers, inc.
4525 South Manhattan Avenue, Tampa, FL 33611-2305
T:813.839.0506 F:813.839.4616 AAC0010624 I:828 CGC1511025
www.longandassociates.com

THIS DOCUMENT IS COPYRIGHTED IN A NOTE TO COME. OWNERSHIP OF DOCUMENTS IS RETAINED BY THE ARCHITECT. REPRODUCTION OR REPRODUCTION WITHOUT WRITTEN CONSENT OF LONG & ASSOCIATES IS PROHIBITED. ALL RIGHTS RESERVED.

HILLSBOROUGH COUNTY SHERIFF'S OFFICE

PINEBROOK BUILDING 4 INTERIOR RENOVATION

1220 - 1238 TECH BLVD.
TAMPA, FL 33619

Seal

ROBERT A. RACE II, P.E.
PE 51483

No.	Date	Issues & Revisions

TO THE BEST OF THE ARCHITECT'S AND/OR ENGINEER'S KNOWLEDGE THESE PLANS AND SPECIFICATIONS COMPLY WITH THE APPLICABLE MINIMUM BUILDING CODES AND THE APPLICABLE FIRE-SAFETY STANDARDS

Phase: 100% CONSTRUCTION DRAWINGS
Drawn By: WM
Checked By: RAR
Job No: 19002
Date: SEPTEMBER 20, 2019
9/19/2019 4:48:05 PM

PARTIAL TELECOM PLAN

E3.5

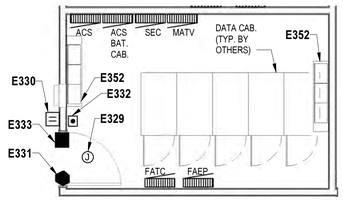

2 ENLARGED MDF PLAN
SCALE: 1/4" = 1'-0"

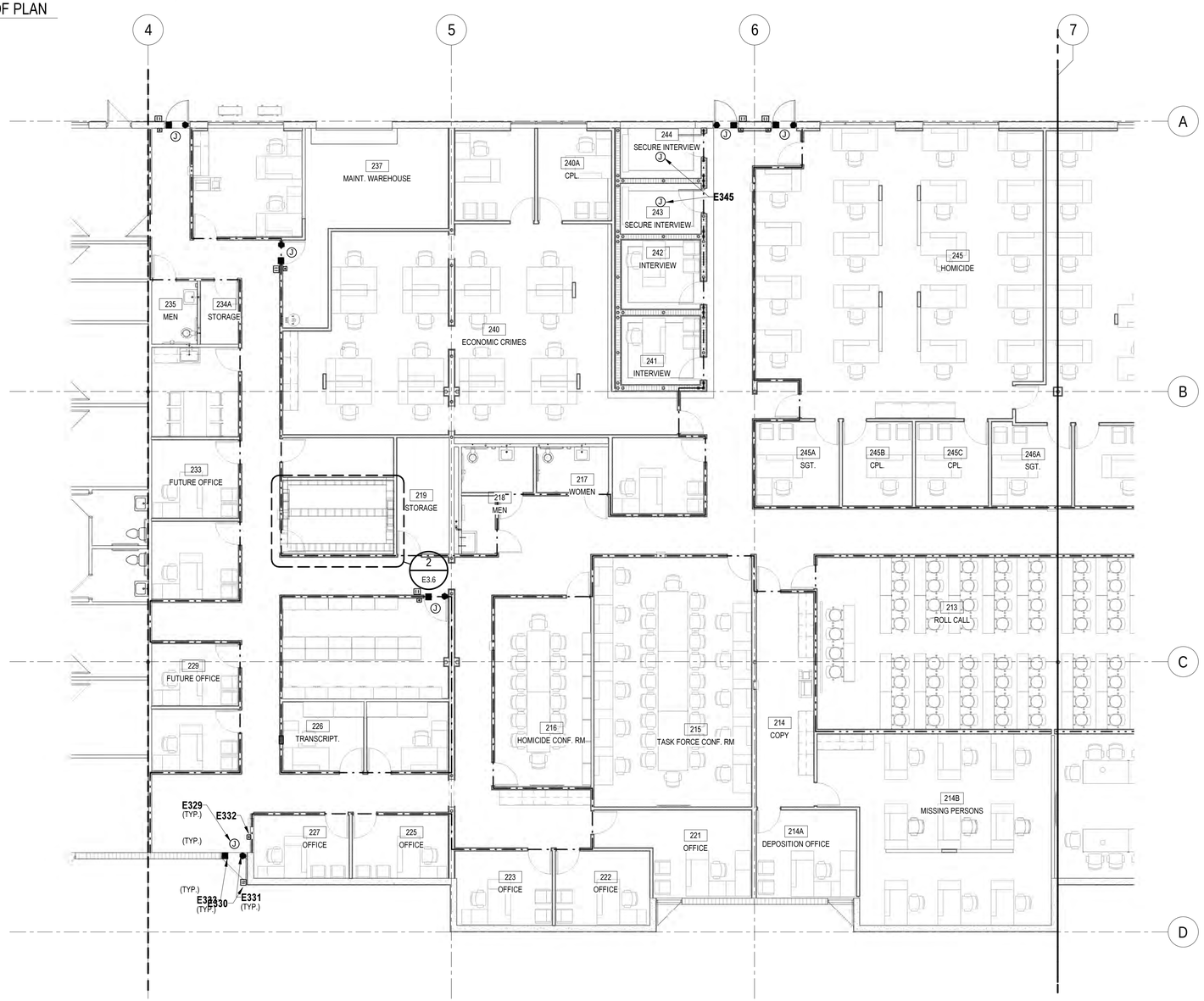

1 PARTIAL POWER & SIGNAL PLAN
SCALE: 1/8" = 1'-0"

GENERAL NOTES

A. REFER TO THE SPECIFICATIONS, LEGEND AND GENERAL NOTES ON DRAWING E0.1.

B. COORDINATE ALL WORK WITH THE PROJECT AND PHASING SCHEDULES, OTHER TRADES AND THE OWNER.

C. U.L. LISTED ASSEMBLIES SHALL BE INSTALLED AT ALL PENETRATIONS OF RATED WALLS. JUNCTION BOXES LOCATED WITHIN RATED WALLS SHALL BE WRAPPED WITH FIRE STOP PUTTY PADS.

D. ALL WORK SHALL BE CONCEALED UNLESS OTHERWISE NOTED.

E. LOCATIONS OF SYMBOLS ON THE FLOOR PLANS ARE AN APPROXIMATION TO ACTUAL DEVICE LOCATIONS. COORDINATE FINAL LOCATIONS WITH OTHER ELEMENTS IN THE VICINITY.

KEYNOTE LEGEND

NO.	DESCRIPTION
E329	JUNCTION BOX FOR CONNECTION TO DOOR ACS POWER SUPPLY CABINET (BY OTHERS) LOCATED ABOVE CEILING. COORDINATE INSTALLATION WITH ACS DOOR INSTALLER (SEE DETAIL #1, SHEET E7.4 FOR ADDITIONAL REQUIREMENTS).
E330	DOOR ACCESS CONTROL CARD READER OVER FLUSH BACKBOX. PROVIDE FLUSH OUTLET BOX AND CONCEALED CONDUIT PATHWAYS FOR DEVICE AND CABLING. COORDINATE INSTALLATION REQUIREMENTS WITH ACS VENDER (SEE DETAIL #1, SHEET E7.4 FOR REFERENCE).
E331	CONCEALED DOOR CONTACT FOR ACCESS CONTROL SYSTEM. PROVIDE CONCEALED CONDUIT PATHWAYS FOR DEVICE WIRING. COORDINATE INSTALLATION REQUIREMENTS WITH OWNER'S ACS VENDOR AND ARCHITECTURAL DOOR SCHEDULE (SEE DETAIL #1, SHEET E7.4 FOR REFERENCE).
E332	ACCESS CONTROL SYSTEM PUSH TO EXIT STATION WITH REQUEST TO EXIT MOTION SENSOR MOUNTED ABOVE DOOR. PROVIDE FLUSH OUTLET BOX AND CONCEALED CONDUIT PATHWAYS FOR DEVICE AND CABLING. COORDINATE INSTALLATION REQUIREMENTS WITH OWNER'S ACS VENDOR (SEE DETAIL #1, SHEET E7.4 FOR REFERENCE).
E333	ELECTRO/MECHANICAL DOOR LOCK. COORDINATE WITH ARCHITECTURAL DOOR SCHEDULE AND ACCESS CONTROL SPECIFICATIONS. PROVIDE OUTLET BOX AND CONCEALED CONDUIT PATHWAYS TO SUPPLY POWER TO DOOR LOCK. COORDINATE INSTALLATION REQUIREMENTS WITH DOOR INSTALLER AND OWNER'S ACS VENDOR (SEE DETAIL #1, SHEET E7.4 FOR REFERENCE).
E345	PROVIDE NEW 4" X 4" J-BOX IN GYP CEILING FOR SECURITY CAMERAS (TO BE PROVIDED BY INFORMATION TECHNOLOGY STAFF).
E352	PACKAGE A/C UNIT ON WALL ABOVE CABLE TRAY.

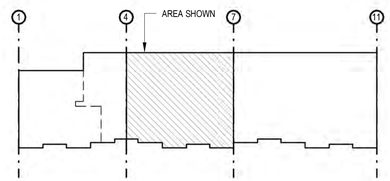

KEY PLAN
SCALE: 1" = 80'-0"

LONG & ASSOCIATES
architects | engineers, inc.
4525 South Manhattan Avenue, Tampa, FL 33611-2305
T:813.839.0506 F:813.839.4616 AAC0010624 I:828 CGC1511025
www.longandassociates.com

THIS DOCUMENT IS COPYRIGHTED IN A UNITED STATE OF AMERICA WITH ALL RIGHTS RESERVED. NO PART OF THIS DOCUMENT MAY BE COPIED OR REPRODUCED IN ANY FORM OR BY ANY MEANS WITHOUT THE EXPRESS WRITTEN CONSENT OF LONG & ASSOCIATES, INC.

HILLSBOROUGH COUNTY SHERIFF'S OFFICE

PINEBROOK BUILDING 4 INTERIOR RENOVATION

1220 - 1238 TECH BLVD.
TAMPA, FL 33619

Seal

ROBERT A. RACE II, P.E.
PE 51483

No.	Date	Issues & Revisions

TO THE BEST OF THE ARCHITECT'S AND/OR ENGINEER'S KNOWLEDGE THESE PLANS AND SPECIFICATIONS COMPLY WITH THE APPLICABLE MINIMUM BUILDING CODES AND THE APPLICABLE FIRE-SAFETY STANDARDS

Phase: 100% CONSTRUCTION DRAWINGS
Drawn By: Author
Checked By: Checker
Job No: 19002
Date: SEPTEMBER 20, 2019
9/19/2019 4:48:11 PM

PARTIAL SECURITY PLAN

E3.6

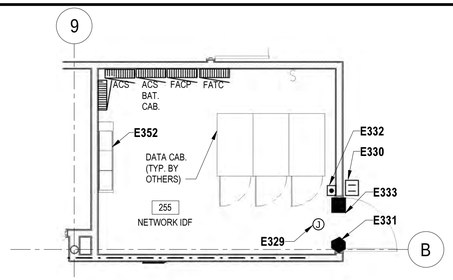

2 ENLARGED MDF PLAN
SCALE: 1/4" = 1'-0"

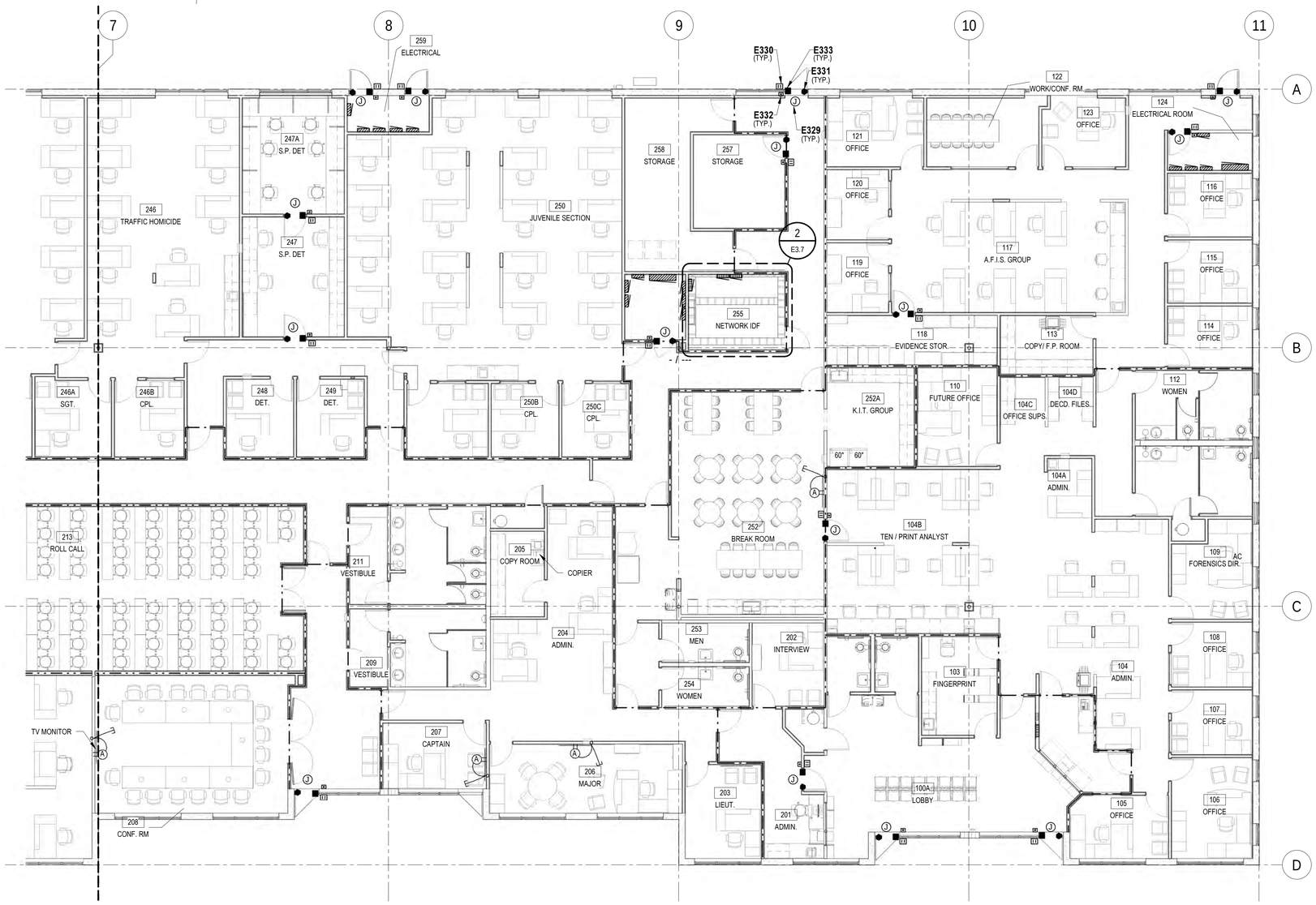

1 PARTIAL POWER & SIGNAL PLAN
SCALE: 1/8" = 1'-0"

GENERAL NOTES

A. REFER TO THE SPECIFICATIONS, LEGEND AND GENERAL NOTES ON DRAWING E0.1.

B. COORDINATE ALL WORK WITH THE PROJECT AND PHASING SCHEDULES, OTHER TRADES AND THE OWNER.

C. U.L. LISTED ASSEMBLIES SHALL BE INSTALLED AT ALL PENETRATIONS OF RATED WALLS. JUNCTION BOXES LOCATED WITHIN RATED WALLS SHALL BE WRAPPED WITH FIRE STOP PUTTY PADS.

D. ALL WORK SHALL BE CONCEALED UNLESS OTHERWISE NOTED.

E. LOCATIONS OF SYMBOLS ON THE FLOOR PLANS ARE AN APPROXIMATION TO ACTUAL DEVICE LOCATIONS. COORDINATE FINAL LOCATIONS WITH OTHER ELEMENTS IN THE VICINITY.

KEYNOTE LEGEND

NO.	DESCRIPTION
E329	JUNCTION BOX FOR CONNECTION TO DOOR ACS POWER SUPPLY CABINET (BY OTHERS) LOCATED ABOVE CEILING. COORDINATE INSTALLATION WITH ACS DOOR INSTALLER (SEE DETAIL #1, SHEET E7.4 FOR ADDITIONAL REQUIREMENTS).
E330	DOOR ACCESS CONTROL CARD READER OVER FLUSH BACKBOX. PROVIDE FLUSH OUTLET BOX AND CONCEALED CONDUIT PATHWAYS FOR DEVICE AND CABLING. COORDINATE INSTALLATION REQUIREMENTS WITH ACS VENDER (SEE DETAIL #1, SHEET E7.4 FOR REFERENCE).
E331	CONCEALED DOOR CONTACT FOR ACCESS CONTROL SYSTEM. PROVIDE CONCEALED CONDUIT PATHWAYS FOR DEVICE WIRING. COORDINATE INSTALLATION REQUIREMENTS WITH OWNER'S ACS VENDOR AND ARCHITECTURAL DOOR SCHEDULE (SEE DETAIL #1, SHEET E7.4 FOR REFERENCE).
E332	ACCESS CONTROL SYSTEM PUSH TO EXIT STATION WITH REQUEST TO EXIT MOTION SENSOR MOUNTED ABOVE DOOR. PROVIDE FLUSH OUTLET BOX AND CONCEALED CONDUIT PATHWAYS FOR DEVICE AND CABLING. COORDINATE INSTALLATION REQUIREMENTS WITH OWNER'S ACS VENDOR (SEE DETAIL #1, SHEET E7.4 FOR REFERENCE).
E333	ELECTRO/MECHANICAL DOOR LOCK. COORDINATE WITH ARCHITECTURAL DOOR SCHEDULE AND ACCESS CONTROL SPECIFICATIONS. PROVIDE OUTLET BOX AND CONCEALED CONDUIT PATHWAYS TO SUPPLY POWER TO DOOR LOCK. COORDINATE INSTALLATION REQUIREMENTS WITH DOOR INSTALLER AND OWNER'S ACS VENDOR (SEE DETAIL #1, SHEET E7.4 FOR REFERENCE).
E352	PACKAGE A/C UNIT ON WALL ABOVE CABLE TRAY.

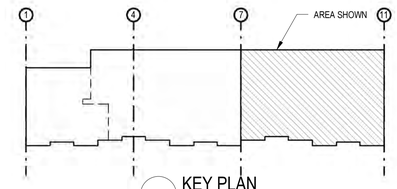

KEY PLAN
SCALE: 1" = 80'-0"

LONG & ASSOCIATES
architects | engineers, inc.
4525 South Manhattan Avenue, Tampa, FL 33611-2305
T:813.839.0506 F:813.839.4616 AAC0010624 IBDR CGC1511025
www.longandassociates.com

THIS DOCUMENT IS COPYRIGHTED IN A NOTICE FORM. THE INTERPRETATION, DISTRIBUTION OR REPRODUCTION OF THIS DOCUMENT WITHOUT THE EXPRESS WRITTEN CONSENT OF LONG & ASSOCIATES IS PROHIBITED. ALL RIGHTS RESERVED.

HILLSBOROUGH COUNTY SHERIFF'S OFFICE

PINEBROOK BUILDING 4 INTERIOR RENOVATION

1220 - 1238 TECH BLVD.
TAMPA, FL 33619

Seal

ROBERT A. RACE II, P.E.
PE 51483

No.	Date	Issues & Revisions

TO THE BEST OF THE ARCHITECT'S AND/OR ENGINEER'S KNOWLEDGE THESE PLANS AND SPECIFICATIONS COMPLY WITH THE APPLICABLE MINIMUM BUILDING CODES AND THE APPLICABLE FIRE-SAFETY STANDARDS

Phase: 100% CONSTRUCTION DRAWINGS
Drawn By: Author
Checked By: Checker
Job No: 19002
Date: SEPTEMBER 20, 2019
9/19/2019 4:48:18 PM

PARTIAL SECURITY PLAN

E3.7

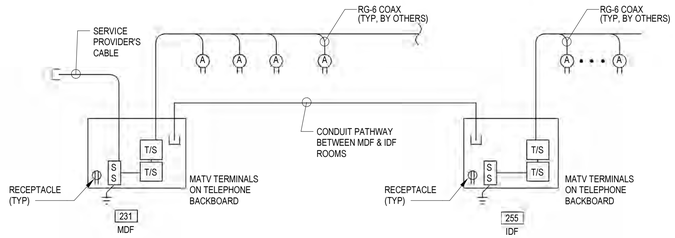

NOTE: ALL MATV CABLES SHALL BE INSTALLED IN CONDUIT.

S S = COAXIAL CABLE SURGE SUPPRESSION DEVICES (BY OTHERS)

T/S = TAPOFF/SPLITTER MODULE (BY OTHERS)

NOTE:
THIS RISER SHOWNS MATV CONDUIT PATHWAY SYSTEMS ONLY. MATV EQUIPMENT CABLING, ACCESSORIES, ETC., BY OTHERS.

2 MATV CONDUIT PATHWAYS DISTRIBUTION SYSTEM RISER

NTS

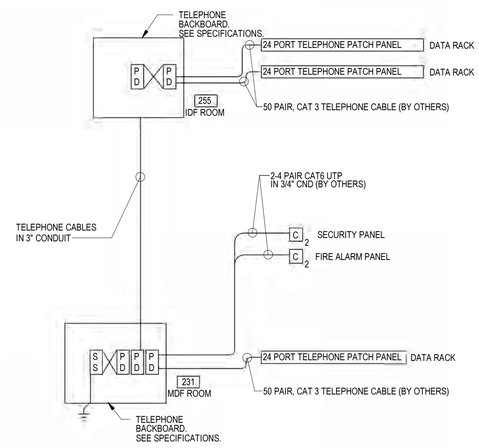

NOTE: ALL TELEPHONE SYSTEM EQUIPMENT AND DEVICES TO BE PROVIDED BY OWNER.
NOTE: ALL TELEPHONE CABLING SHALL BE INSTALLED IN CONDUIT.

S S = MULTIPLE SURGE SUPPRESSION PUNCHDOWN BLOCKS WITH MODULES (25 PAIR) (BY OTHERS)

P P = MULTIPLE TYPE 66 PUNCHDOWN BLOCKS (50 PAIR) (BY OTHERS)

1 TELEPHONE CONDUIT PATHWAY DISTRIBUTION SYSTEM RISER

NTS

NOTE:
THIS RISER SHOWNS CONDUIT PATHWAYS ONLY. TELEPHONE SYSTEM EQUIPMENT CABLING AND ACCESSORIES, BY OTHERS.

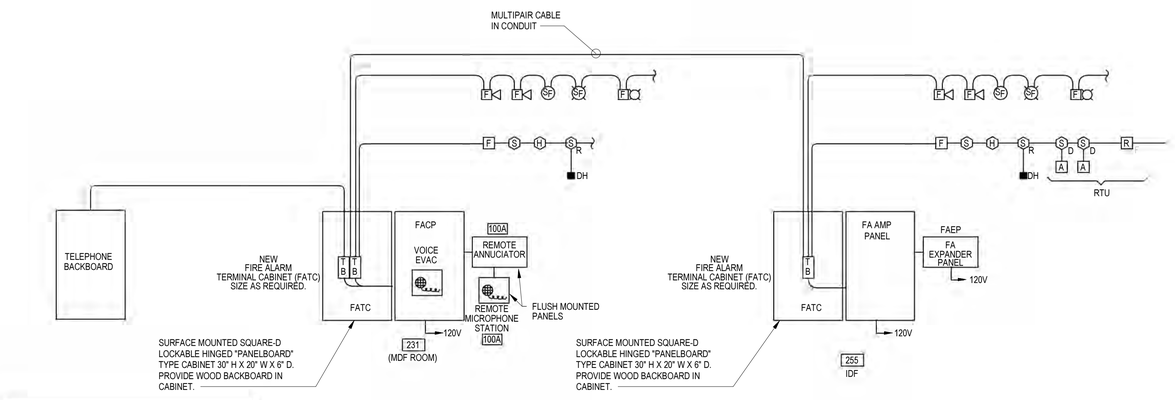

NOTE:
THESE RISERS ARE SHOWN FOR REFERENCE ONLY. CONFIRM QUANTITIES AND LOCATIONS WITH BUILDING PLANS AND SPECIFICATIONS. ALL FIRE ALARM WIRING SHALL BE INSTALLED IN CONDUIT.

T B = CONDUCTOR BARRIER-TYPE TERMINAL STRIPS

SPD = SURGE SUPPRESSOR

3 FIRE ALARM RISER

NTS

LONG & ASSOCIATES
architects | engineers, inc.
4525 South Manhattan Avenue, Tampa, FL 33611-2305
T:813.839.0506 F:813.839.4616 AA C001624 IB28 CGC1511025
www.longandassociates.com

THIS DOCUMENT IS COPYRIGHTED MATERIAL AND THEREFORE IS DISTINGUISHED BY THE PROTECTION RECEIVED FROM COPYRIGHT LAW. LONG & ASSOCIATES RESERVES ALL RIGHTS RESERVED

HILLSBOROUGH COUNTY SHERIFF'S OFFICE

PINEBROOK BUILDING 4 INTERIOR RENOVATION

1220 - 1238 TECH BLVD.
TAMPA, FL 33619

Seal

ROBERT A. RACE II, P.E.
PE 51483

No.	Date	Issues & Revisions

TO THE BEST OF THE ARCHITECT'S AND/OR ENGINEER'S KNOWLEDGE THESE PLANS AND SPECIFICATIONS COMPLY WITH THE APPLICABLE MINIMUM BUILDING CODES AND THE APPLICABLE FIRE-SAFETY STANDARDS

Phase: 100% CONSTRUCTION DRAWINGS
Drawn By: XG
Checked By: RAR
Job No: 19002
Date: SEPTEMBER 20, 2019
9/19/2019 4:48:21 PM

SIGNAL SYSTEMS RISERS

E5.1

NEW BUILDING SERVICE #1 LOAD SUMMARY		
LOAD	CONN KVA	DESIGN KVA
LIGHTING	16.0	98.9
RECEPTACLES	110.2	90.2
WATER HEATER	20.8	20.8
COOLING	12.3	-
HEATING	131.7	105.4
FANS	37.9	47.4
MISC EQUIPMENTS	110.9	110.9
TOTAL	439.8	473.6
FUTURE (25%)		118.4
TOTAL		592.0

$\frac{592.0\ KVA}{208 \times \sqrt{3}}$ = 1643.3 AMPS ⟹ 2000 AMPS SERVICE

BUILDING SERVICE #2 LOAD SUMMARY	
LOAD	DESIGN KVA
METER #9	64.8
METER #8	57.6
METER #5	17.4
FUTURE (20%)	28.0
TOTALS	167.8

$\frac{167.8\ KVA}{1.73 \times \sqrt{3}}$ = 465.8 AMPS ⟹ 600 AMPS SERVICE

RISER KEYNOTES

6. COORDINATE TECO CT CABINET REQUIREMENTS AND INSTALLATION WITH TECO. PROVIDE CONCRETE POSTS AND GALVANIZED UNISTRUT SUPPORT STANCHION AND MOUNT CABINET TO SUPPORT STANCHION.
7. VERIFY SERVICE CAN BE REMOVED PRIOR TO REMOVING SERVICE. COORDINATE WITH TENNANT AND BLDG OWNER.
8. PROVIDE PLASTIC ENGRAVED LABEL ON SWITCHBOARD READING: "SERVICE DISCONNECT #1 OF 2".
9. PROVIDE PLASTIC ENGRAVED LABEL ON DISCONNECT SWITCH READING: "SERVICE DISCONNECT #2 OF 2".

GENERNAL NOTE

A. ALL ELECTRICAL GROUNDING CONDUCTORS SHALL BE CADWELDED TO GROUND RODS

B. COORDINATE SITE ELECTRICAL WORK WITH TECO REPRESENTATIVE STEVE MICCIO (813-228-1626) INCLUDE IN BID ALL RELATED TECO COSTS FOR ELECTRICAL WORK SHOWN. COORDINATE REQUIREMENTS FOR ELECTTRICAL SERVICE INSTALLATIONS WITH TECO.

C. PROVIDE HIGH VOLTAGE WARNING TAPE ABOVE ALL UNDERGROUND POWER CONDUITS. WARNING TAPE SHALL BE BURIED 12" BELOW FINISHED GRADE.

RISER KEYNOTES

1. 3/4" X 20' GROUND RODS. SEPERATE RODS EQUAL TO ROD DEPTH. ALL GROUND ROD CONNECTS EXOTHERMIC. TRIAD POSITION.
2. REFER TO SPECIFICATIONS FOR SURGE SUPPRESSOR REQUIREMENTS.
3. SEE PANELBOARD SCHEDULE FOR FEEDER REQUIREMENTS.
4. SEE SERVICE SWTICHBOARD 'MSP' SCHEDULE FOR CIRCUIT REQUIREMENTS.
5. COORDINATE UPGRADING OF EXISTING TECO TRANSFORMER WITH TECO. COORDINATE INSTALLATION OF NEW SERVICE LATERAL CONDUCTORS, TECO CT CABINET AND METER WITH TECO REPRESENTATIVE STEVE MICCIO (813-228-1626) AND PROJECT CONSTRUCTION MANAGER OR GENERAL CONTRACTOR. COORDINATE POWER SHUT DOWN REQUIRED TO INSTALL NEW EQUIPMENT WITH WAWA'S MANAGER/OWNER AND BLDG OWNER MANAGER. CABINET AND METER INSTALLATIONS SHALL BE IN COMPLIANCE WITH TECO'S STANDARD ELECTRICAL SERVICE REQUIREMENTS. CONNECT NEW AND EXISTING SERVICE LATERAL CONDUCTORS TO SECONDARY LUGS OF TRANSFORMER.

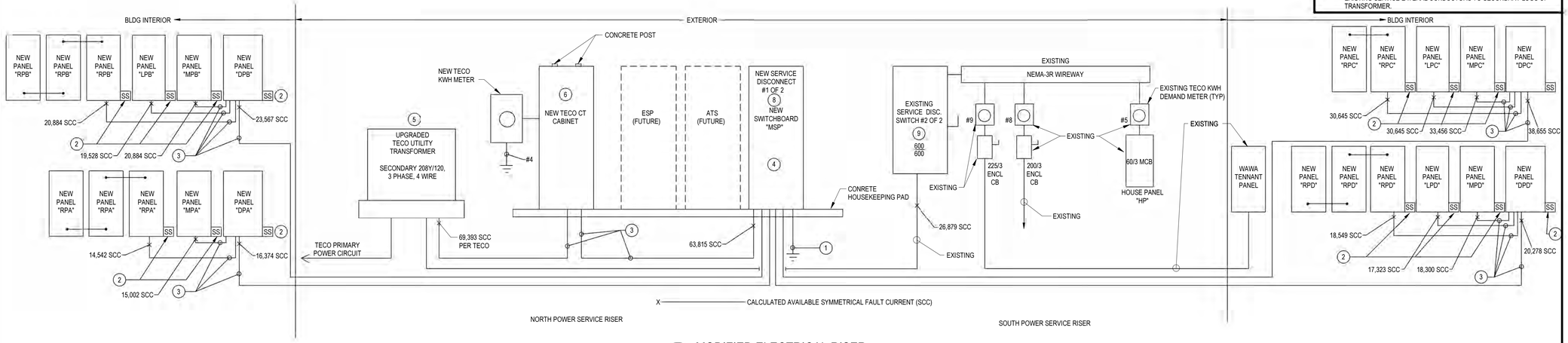

2 MODIFIED ELECTRICAL RISER
SCALE: NTS

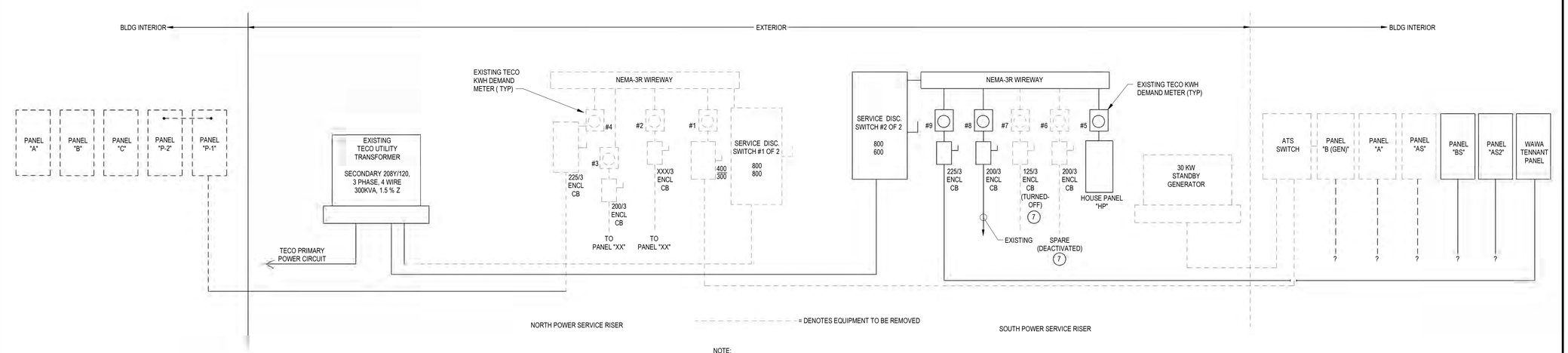

NOTE:
ALL EQUIPMENT AND FEEDERS SHOWN ON RISER ARE EXISTING, UON.

1 EXISTING ELECTRICAL RISER
SCALE: NTS

LONG & ASSOCIATES
architects | engineers, inc.
4525 South Manhattan Avenue, Tampa, FL 33611-2305
T:813.839.0206 F:813.839.4616 AA C001624 IB28 CGC1511025
www.longandassociates.com

THIS DOCUMENT IS COPYRIGHT PROTECTED. THE INTENTIONS OF LONG & ASSOCIATES, INC. TO PROVIDE THIS DOCUMENT TO THE OWNER FOR USE IN THE CONSTRUCTION, OPERATION, MAINTENANCE AND FUTURE ALTERATIONS OF THE PROJECT. REPRODUCTIONS OF THIS DOCUMENT BY OTHERS WITHOUT WRITTEN PERMISSION OF LONG & ASSOCIATES, INC. IS PROHIBITED.

HILLSBOROUGH COUNTY SHERIFF'S OFFICE

PINEBROOK BUILDING 4 INTERIOR RENOVATION

1220 - 1238 TECH BLVD.
TAMPA, FL 33619

Seal

ROBERT A. RACE II, P.E.
PE 51483

No.	Date	Issues & Revisions

TO THE BEST OF THE ARCHITECT'S AND/OR ENGINEER'S KNOWLEDGE THESE PLANS AND SPECIFICATIONS COMPLY WITH THE APPLICABLE MINIMUM BUILDING CODES AND THE APPLICABLE FIRE-SAFETY STANDARDS

Phase: 100% CONSTRUCTION DRAWINGS
Drawn By: XG
Checked By: RAR
Job No: 19002
Date: SEPTEMBER 20, 2019
9/19/2019 4:48:24 PM

ELECTRICAL RISERS

E6.1

PANELBOARD "DPA"

120/208 VOLTS 3PH, 4W
SURFACE MTD 30 KAIC SYMM
☐ MLO:
■ MCB: 400 AMPS*****

BRANCH LOAD	AMPS			CB/P	A B C		CB/P	AMPS			BRANCH LOAD
SPARE				20/1	1	2	20/1				SPARE
SPARE				20/1	3	4	20/1				SPARE
SPARE				20/1	5	6	20/1				SPARE
SPARE				20/1	7	8	20/1				SPARE
SPACE				-/1	9	10	-/1				SPACE
SPACE				-/1	11	12	-/1				SPACE
SPACE				-/1	13	14	-/1				SPACE
SPACE				-/1	15	16	-/1				SPACE
SPACE				-/1	17	18	-/1				SPACE
PANEL "MPA"	171			225/3	19	20	-/1				SPACE
-		172.5		-		22	-/1				SPACE
-			171	-		24	-/1				SPACE
PANEL "RPA"	112.5			150/3	25	26	30/3				SURGE SUPPRESSOR
-		94.5		-			-				-
-			92.5	-			-				-

TOTAL AMPS: A PH = 283.5 B PH = 267 C PH = 263.5

LOADS	CONN KVA		FACTOR		DMD KVA		DIVERSITY		DES KVA
LIGHTING	-	x	*	=	-	x	1.00	=	-
RECEPT	27.7	x	**	=	22.4	x	1.00	=	22.4
WATER HEATER	-	x	1.00	=	-	x	1.00	=	-
COOLING	-	x	1.00	=	-	x	1.00	=	-
HEATING	54	x	1.00	=	54	x	.8	=	43.2
LARGEST MOTOR	-	x	1.25	=	-	x	1.00	=	-
FANS	5.8	x	1.25	=	7.2	x	1.00	=	7.2
MISC	10.1	x	1.00	=	10.1	x	1.00	=	10.1
FUTURE	-	x	1.00	=	-	x	1.00	=	16.6
TOTALS	97.6 KVA				93.7 KVA				99.5 KVA

REMARKS:
SQUARE D OR EQUIVALENT
44" WIDE MAXIMUM

■ EQUIPMENT GROUND BAR

FEEDER: 2 SETS OF 4-4/0, #2 EGC IN 2 1/2" CNDS. * NEC 220.12 ** NEC 220.44 *** NONCOINCIDENT NEC 220.60

NOTE: PROVIDE ROOM NUMBER AND LOAD DESCRIPTION FOR BRANCH CIRCUIT ON DIRECTORY CARDS.
***** MCB SHALL BE PROVIDED WITH L,S,I ELECTRONIC ADJUSTABLE TRIP SETTINGS.

PANELBOARD "MPA"

120/208 VOLTS 3PH, 4W
SURFACE MTD 25 KAIC SYMM
☐ MLO:
■ MCB: 225 AMPS

BRANCH LOAD	AMPS			CB/P	A B C		CB/P	AMPS			BRANCH LOAD
RTU - 18	85.5			****125/3	1	2	****125/3	85.5			RTU - 19
-		85.5		-			-		85.5		-
-			85.5	-			-			85.5	-
SPARE				20/1	7	8	20/1				ROOF EXHAUST FAN
ROOF SERVICE RECPT		1.5		20/1	9	10	20/1				SPARE
SPARE				20/1	11	12	20/1				SPARE
SPARE				20/1	13	14	20/1				SPARE
SPARE				20/1	15	16	20/1				SPARE
SPARE				20/1	17	18	-/1				SPACE
SPACE				-/1	19	20	-/1				SPACE
SPACE				-/1	21	22	-/1				SPACE
SPACE				-/1	23	24	-/1				SPACE
SPACE				-/1	25	26	30/3				SURGE SUPPRESOR
SPACE				-/1	27		-				-
SPACE				-/1	29		-				-

TOTAL AMPS: A PH = 171 B PH = 172.5 C PH = 171

LOADS	CONN KVA		FACTOR		DMD KVA		DIVERSITY		DES KVA
LIGHTING	-	x	*	=	-	x	1.00	=	-
RECEPT	0.2	x	**	=	0.2	x	1.00	=	0.2
WATER HEATER	-	x	1.00	=	-	x	1.00	=	-
COOLING	-	x	1.00	=	-	x	1.00	=	-
HEATING	54	x	1.00	=	54	x	.8	=	43.2
LARGEST MOTOR	-	x	1.25	=	-	x	1.00	=	-
FANS	5.8	x	1.25	=	7.2	x	1.00	=	7.2
MISC	1.7	x	1.00	=	1.7	x	1.00	=	1.7
FUTURE	-	x	1.00	=	-	x	1.00	=	10.5
TOTALS	61.7 KVA				63.1 KVA				62.8 KVA

REMARKS:
SQUARE D OR EQUIVALENT

■ EQUIPMENT GROUND BAR

FEEDER: 4-4/0, #4 EGC IN 2 1/2" CND. * NEC 220.12 ** NEC 220.44 *** NONCOINCIDENT NEC 220.60

NOTE: PROVIDE ROOM NUMBER AND LOAD DESCRIPTION FOR BRANCH CIRCUIT ON DIRECTORY CARDS.
**** HACR RATED CB

PANELBOARD "RPA" (SECTION #1 OF 3)

120/208 VOLTS 3PH, 4W
SURFACE MTD 25 KAIC SYMM
☐ MLO:
■ MCB: 150 AMPS

BRANCH LOAD	AMPS			CB/P	A B C		CB/P	AMPS			BRANCH LOAD
RECEPTACLES	6			20/1	1	2	20/1	6			RECEPTACLES
RECEPTACLES		4.5		20/1	3	4	20/1		6		COPIER RECEPTACLE
TV RECEPTACLE			6	20/1	5	6	20/1			3	RECEPTACLES
RECEPTACLES	6			20/1	7	8	20/1	3			RECEPTACLES
RECEPTACLES		6		20/1	9	10	20/1		3		RECEPTACLES
RECEPTACLES			6	20/1	11	12	20/1			3	RECEPTACLES
RECEPTACLES	6			20/1	13	14	20/1	3			RECEPTACLES
RECEPTACLES		6		20/1	15	16	20/1		6		RECEPTACLES
PRINTER RECEPTACLE			6	20/1	17	18	20/1			4.5	RECEPTACLES
PRINTER RECEPTACLE	6			20/1	19	20	20/1	6			RECEPTACLES
RECEPTACLES		3		20/1	21	22	20/1		6		RECEPTACLES
RECEPTACLES			6	20/1	23	24	20/1			6	RECEPTACLES
RECEPTACLES	4.5			20/1	25	26	20/1	6			RECEPTACLES
RECEPTACLES		4.5		20/1	27	28	20/1				SPARE
RECEPTACLES			6	20/1	29	30	20/1				SPARE
RECEPTACLES	6			20/1	31	32	20/1				SPARE
SPARE				20/1	33	34	20/1				SPARE
SPARE				20/1	35	36	20/1				SPARE
SPARE				20/1	37	38	30/3				SURGE SUPPRESOR
SPARE				20/1	39		-				-
SPARE				20/1	41		-				-

TOTAL AMPS: A PH = 112.5 B PH = 94.5 C PH = 92.5

LOADS	CONN KVA		FACTOR		DMD KVA		DIVERSITY		DES KVA
LIGHTING	-	x	*	=	-	x	1.00	=	-
RECEPT	27.5	x	**	=	22.3	x	1.00	=	22.3
WATER HEATER	-	x	1.00	=	-	x	1.00	=	-
COOLING	-	x	1.00	=	-	x	1.00	=	-
HEATING	-	x	1.00	=	-	x	.8	=	-
LARGEST MOTOR	-	x	1.25	=	-	x	1.00	=	-
FANS	-	x	1.25	=	-	x	1.00	=	-
MISC	8.4	x	1.00	=	8.4	x	1.00	=	8.4
FUTURE	-	x	1.00	=	-	x	1.00	=	6.1
TOTALS	35.9 KVA				30.7 KVA				36.8 KVA

REMARKS:
SQUARE D OR EQUIVALENT

■ EQUIPMENT GROUND BAR ■ FEED-THRU LUGS

FEEDER: 4-2/0, #6 EGC IN 2" CND. * NEC 220.12 ** NEC 220.44 *** NONCOINCIDENT NEC 220.60

NOTE: PROVIDE ROOM NUMBER AND LOAD DESCRIPTION FOR BRANCH CIRCUIT ON DIRECTORY CARDS.

PANELBOARD "RPA" (SECTION #2 OF 3)

120/208 VOLTS 3PH, 4W
SURFACE MTD 25 KAIC SYMM
■ MLO: 150 AMPS
☐ MCB:

BRANCH LOAD	AMPS			CB/P	A B C		CB/P	AMPS			BRANCH LOAD
RECEPTACLES	3			20/1	43	44	20/1	4.5			RECEPTACLES
RECEPTACLES		3		20/1	45	46	20/1		6		PRINTER RECEPTACLE
RECEPTACLES			3	20/1	47	48	20/1			3	RECEPTACLES
RECEPTACLES	3			20/1	49	50	20/1	6			PRINTER RECEPTACLE
RECEPTACLES		3		20/1	51	52	20/1		3		RECEPTACLES
RECEPTACLES			6	20/1	53	54	20/1			6	PRINTER RECEPTACLE
RECEPTACLES	6			20/1	55	56	20/1	6			PRINTER RECEPTACLE
RECEPTACLES		6		20/1	57	58	20/1		6		RECEPTACLES
RECEPTACLES			6	20/1	59	60	20/1			3	PAPER SHREDDER REC
RECEPTACLES	6			20/1	61	62	20/1	6			RECEPTACLES
RECEPTACLES		6		20/1	63	64	20/1		6		COPIER RECEPTACLE
RECEPTACLES			3	20/1	65	66	20/1			6	ULTRASOUND MACHINE
RECEPTACLES	6			20/1	67	68	20/1				SPARE
RECEPTACLES		6		20/1	69	70	20/1		1.5		RECEPTACLES
RECEPTACLES			6	20/1	71	72	20/1			3	RECEPTACLES
EWC RECEPTACLE	6			20/1	73	74	20/1				SPARE
SPARE				20/1	75	76	20/1				SPARE
SPARE				20/1	77	78	20/1				SPARE
SPARE				20/1	79	80	20/1				SPARE
SPARE				20/1	81	82	20/1				SPARE
SPARE				20/1	83	84	20/1				SPARE

TOTAL AMPS: A PH = 52.5 B PH = 46.5 C PH = 45

■ EQUIPMENT GROUND BAR ■ FEED-THRU LUGS

FEEDER: 4-2/0, #6 EGC IN 2" CND. * NEC 220.12 ** NEC 220.44 *** NONCOINCIDENT NEC 220.60

NOTE: PROVIDE ROOM NUMBER AND LOAD DESCRIPTION FOR BRANCH CIRCUIT ON DIRECTORY CARDS.

PANELBOARD "RPA" (SECTION #3 OF 3)

120/208 VOLTS 3PH, 4W
SURFACE MTD 25 KAIC SYMM
■ MLO: 150 AMPS
☐ MCB:

BRANCH LOAD	AMPS			CB/P	A B C		CB/P	AMPS			BRANCH LOAD
RECEPTACLES	3			20/1	85	86	20/1				SPARE
RECEPTACLES		3		20/1	87	88	20/1				SPARE
FAA PNL			1	20/1	89	90	20/1				SPARE
SPARE				20/1	91	92	20/1				SPARE
SPARE				20/1	93	94	20/1				SPARE
SPARE				20/1	95	96	20/1				SPARE
SPARE				20/1	97	98	20/1				SPARE
SPARE				20/1	99	100	20/1				SPARE
SPACE				-/1	101	102	-/1				SPACE
SPACE				-/1	103	104	-/1				SPACE
SPACE				-/1	105	106	-/1				SPACE
SPACE				-/1	107	108	-/1				SPACE
SPACE				-/1	109	110	-/1				SPACE
SPACE				-/1	111	112	-/1				SPACE
SPACE				-/1	113	114	-/1				SPACE
SPACE				-/1	115	116	-/1				SPACE
SPACE				-/1	117	118	-/1				SPACE
SPACE				-/1	119	120	-/1				SPACE
SPACE				-/1	121	122	-/1				SPACE
SPACE				-/1	123	124	-/1				SPACE
SPACE				-/1	125	126	-/1				SPACE

TOTAL AMPS: A PH = 3 B PH = 3 C PH = 1

■ EQUIPMENT GROUND BAR

FEEDER: 4-2/0, #6 EGC IN 2" CNDS. * NEC 220.12 ** NEC 220.44 *** NONCOINCIDENT NEC 220.60

NOTE: PROVIDE ROOM NUMBER AND LOAD DESCRIPTION FOR BRANCH CIRCUIT ON DIRECTORY CARDS.

ELECTRICAL ROOM #259

STANLEY PHARMACEUTICALS PANEL "DPB"

120/208 VOLTS 3PH, 4W
SURFACE MTD 30 KAIC SYMM
☐ MLO:
■ MCB: 500 AMPS*****

BRANCH LOAD	AMPS			CB/P	A B C		CB/P	AMPS			BRANCH LOAD
SPARE				20/1	1	2	20/1				SPARE
SPARE				20/1	3	4	20/1				SPARE
SPARE				20/1	5	6	20/1				SPARE
SPARE				20/1	7	8	20/1				SPARE
SPACE				-/1	9	10	-/1				SPACE
SPACE				-/1	11	12	-/1				SPACE
SPACE				-/1	13	14	-/1				SPACE
SPACE				-/1	15	16	-/1				SPACE
SPACE				-/1	17	18	-/1				SPACE
PANEL "MPB"	131			225/3	19	20	125/3	17.1			PANEL "LPB"
-		129		-			-		12.7		-
-			111	-			-			12.6	-
PANEL "RPB"	124			200/3	25	26	30/3				SURGE SUPPRESOR
-		124		-			-				-
-			119.5	-			-				-

TOTAL AMPS: A PH = 272.1 B PH = 265.7 C PH = 243.1

LOADS	CONN KVA		FACTOR		DMD KVA		DIVERSITY		DES KVA
LIGHTING	5.1	x	*	=	30.5	x	1.00	=	30.5
RECEPT	16.9	x	**	=	14.8	x	1.00	=	14.8
WATER HEATER	15.6	x	1.00	=	15.6	x	1.00	=	15.6
COOLING	4.1	x	1.00	=	4.1	x	1.00	=	4.1
HEATING	13.5	x	1.00	=	13.5	x	1.00	=	13.5
LARGEST MOTOR	-	x	1.25	=	-	x	1.00	=	-
FANS	5.9	x	1.25	=	7.4	x	1.00	=	7.4
MISC	32.6	x	1.00	=	32.6	x	1.00	=	32.6
FUTURE	-	x	1.00	=	-	x	1.00	=	23.7
TOTALS	93.7 KVA				118.5 KVA				142.2 KVA

REMARKS:
SQUARE D OR EQUIVALENT
44" WIDE MAXIMUM

■ EQUIPMENT GROUND BAR

FEEDER: 2 SETS OF 4-250 KCMIL, #1 EGC IN 2 1/2" CNDS. * NEC 220.12 ** NEC 220.44 *** NONCOINCIDENT NEC 220.60

NOTE: PROVIDE ROOM NUMBER AND LOAD DESCRIPTION FOR BRANCH CIRCUIT ON DIRECTORY CARDS.
***** MCB SHALL BE PROVIDED WITH L,S,I ELECTRONIC ADJUSTABLE TRIP SETTINGS.

"MPB"

120/208 VOLTS 3PH, 4W
SURFACE MTD 25 KAIC SYMM
☐ MLO:
■ MCB: 225 AMPS

BRANCH LOAD	AMPS			CB/P	A B C		CB/P	AMPS			BRANCH LOAD
RTU -15	28.2			****40/3	1	2	****30/3	19.8			RTU -16
-		28.2		-			-		19.8		-
-			28.2	-			-			19.8	-
RTU -17	19.8			****30/3	7	8	20/1	3			ROOF SERVICE RECPTS
-		19.8		-		10	20/1		1		EF - 10
-			19.8	-		12	20/1				SPARE
ACU-3/CU-3	17			20/2	13	14	20/1				SPARE
-		17		-		16	20/1				SPARE
WATER HEATER "WH-1"			21.6	30/2	17	18	20/1				SPARE
-	21.6			-		20	20/1				SPARE
WATER HEATER "WH-1"		21.6		30/2	21	22	-/1				SPACE
-			21.6	-		24	-/1				SPACE
WATER HEATER "WH-1"	21.6			30/2	25	26	-/1				SPACE
-		21.6		-		28	-/1				SPACE
SPARE				20/1	29	30	-/1				SPACE
SPARE				20/1	31	32	-/1				SPACE
SPARE				20/1	33	34	-/1				SPACE
SPARE				20/1	35	36	-/1				SPACE
SPACE				-/1	37	38	30/3				SURGE SUPPRESOR
SPACE				-/1	39		-				-
SPACE				-/1	41		-				-

TOTAL AMPS: A PH = 131 B PH = 129 C PH = 111

LOADS	CONN KVA		FACTOR		DMD KVA		DIVERSITY		DES KVA
LIGHTING	-	x	*	=	-	x	1.00	=	-
RECEPT	-	x	**	=	-	x	1.00	=	-
WATER HEATER	15.6	x	1.00	=	15.6	x	1.00	=	15.6
COOLING	4.1	x	1.00	=	4.1	x	1.00	=	4.1
HEATING	13.5	x	1.00	=	13.5	x	1.00	=	13.5
LARGEST MOTOR	-	x	1.25	=	-	x	1.00	=	-
FANS	5.9	x	1.25	=	7.4	x	1.00	=	7.4
MISC	5.4	x	1.00	=	5.4	x	1.00	=	5.4
FUTURE	-	x	1.00	=	-	x	1.00	=	9.2
TOTALS	44.5 KVA				46.0 KVA				55.2 KVA

REMARKS:
SQUARE D OR EQUIVALENT

■ EQUIPMENT GROUND BAR

FEEDER: 4-4/0, #4 EGC IN 2 1/2" CND. * NEC 220.12 ** NEC 220.44 *** NONCOINCIDENT NEC 220.60

NOTE: PROVIDE ROOM NUMBER AND LOAD DESCRIPTION FOR BRANCH CIRCUIT ON DIRECTORY CARDS.
**** HACR RATED CB

"LPB"

120/208 VOLTS 3PH, 4W
SURFACE MTD 25 KAIC SYMM
☐ MLO:
■ MCB: 125 AMPS

BRANCH LOAD	AMPS			CB/P	A B C		CB/P	AMPS			BRANCH LOAD
CORRIDOR LIGHTS	3.0			20/1	1	2	20/1	8.1			LIGHTS
LIGHTS		6.3		20/1	3	4	20/1		6.4		LIGHTS
LIGHTS			7.7	20/1	5	6	20/1			4.9	LIGHTS
LIGHTS	6.0			20/1	7	8	20/1				SPARE
SPARE				20/1	9	10	20/1				SPARE
SPARE				20/1	11	12	20/1				SPARE
SPARE				20/1	13	14	20/1				SPARE
SPARE				20/1	15	16	20/1				SPARE
SPARE				20/1	17	18	20/1				SPARE
SPARE				20/1	19	20	30/3				SURGE SUPPRESOR
SPARE				20/1	21		-				-
SPARE				20/1	23		-				-

TOTAL AMPS: A PH = 17.1 B PH = 12.7 C PH = 12.6

LOADS	CONN KVA		FACTOR		DMD KVA		DIVERSITY		DES KVA
LIGHTING	5.1	x	*	=	30.5	x	1.00	=	30.5
RECEPT	-	x	**	=	-	x	1.00	=	-
WATER HEATER	-	x	1.00	=	-	x	1.00	=	-
COOLING	-	x	1.00	=	-	x	1.00	=	-
HEATING	-	x	1.00	=	-	x	.8	=	-
LARGEST MOTOR	-	x	1.25	=	-	x	1.00	=	-
FANS	-	x	1.25	=	-	x	1.00	=	-
MISC	-	x	1.00	=	-	x	1.00	=	-
FUTURE	-	x	1.00	=	-	x	1.00	=	6.1
TOTALS	5.1 KVA				30.5 KVA				36.6 KVA

REMARKS:
SQUARE D OR EQUIVALENT

■ EQUIPMENT GROUND BAR

FEEDER: 4-1/0, #6 EGC IN 2" CND. * NEC 220.12 ** NEC 220.44 *** NONCOINCIDENT NEC 220.60

NOTE: PROVIDE ROOM NUMBER AND LOAD DESCRIPTION FOR BRANCH CIRCUIT ON DIRECTORY CARDS.

PANELBOARD "RPB" (SECTION #1 OF 3)

120/208 VOLTS 3PH, 4W
SURFACE MTD 25 KAIC SYMM
☐ MLO:
■ MCB: 200 AMPS

BRANCH LOAD	AMPS			CB/P	A B C		CB/P	AMPS			BRANCH LOAD
SPARE				20/1	1	2	20/1	6			RECEPTACLES
IDF QUAD RECEPTACLES		10		20/1	3	4	20/1		6		RECEPTACLES
IDF QUAD RECEPTACLES			10	20/1	5	6	20/1			6	RECEPTACLES
IDF QUAD RECEPTACLES	10			20/1	7	8	20/1	6			RECEPTACLES
IDF QUAD RECEPTACLES		10		20/1	9	10	20/1		6		RECEPTACLES
IDF QUAD RECEPTACLES			10	20/1	11	12	20/1			7.5	RECEPTACLES
IDF QUAD RECEPTACLES	10			20/1	13	14	20/1	6			RECEPTACLES
IDF QUAD RECEPTACLES		10		20/1	15	16	20/1		6		RECEPTACLES
IDF QUAD RECEPTACLES			10	20/1	17	18	20/1			6	RECEPTACLES
IDF QUAD RECEPTACLES	10			20/1	19	20	20/1	4.5			RECEPTACLES
IDF QUAD RECEPTACLES		10		20/1	21	22	20/1		6		RECEPTACLES
IDF QUAD RECEPTACLES			10	20/1	23	24	20/1			6	TV RECEPTACLE
IDF QUAD RECEPTACLES	10			20/1	25	26	20/1	6			RECEPTACLES
IDF DUBLEX RECEPTACLES		6		20/1	27	28	20/1				SPARE
IDF DUBLEX RECEPTACLES			7.5	20/1	29	30	20/1				SPARE
SPARE				20/1	31	32	20/1				SPARE
SPARE				20/1	33	34	20/1				SPARE
SPARE				20/1	35	36	20/1				SPARE
SPARE				30/3	37	38	30/3				SURGE SUPPRESOR
SPARE				20/1	39		-				-
SPARE				20/1	41		-				-

TOTAL AMPS: A PH = 124 B PH = 124 C PH = 119.5

LOADS	CONN KVA		FACTOR		DMD KVA		DIVERSITY		DES KVA
LIGHTING	-	x	*	=	-	x	1.00	=	-
RECEPT	16.9	x	**	=	14.8	x	1.00	=	14.8
WATER HEATER	-	x	1.00	=	-	x	1.00	=	-
COOLING	-	x	1.00	=	-	x	1.00	=	-
HEATING	-	x	1.00	=	-	x	.8	=	-
LARGEST MOTOR	-	x	1.25	=	-	x	1.00	=	-
FANS	-	x	1.25	=	-	x	1.00	=	-
MISC	27.2	x	1.00	=	27.2	x	1.00	=	27.2
FUTURE	-	x	1.00	=	-	x	1.00	=	8.4
TOTALS	44.1 KVA				42.0 KVA				50.4 KVA

REMARKS:
SQUARE D OR EQUIVALENT

■ EQUIPMENT GROUND BAR ■ FEED-THRU LUGS

FEEDER: 4-4/0, #4 EGC IN 2 1/2" CND. * NEC 220.12 ** NEC 220.44 *** NONCOINCIDENT NEC 220.60

NOTE: PROVIDE ROOM NUMBER AND LOAD DESCRIPTION FOR BRANCH CIRCUIT ON DIRECTORY CARDS.

PANELBOARD "RPB" (SECTION #2 OF 3)

120/208 VOLTS 3PH, 4W
SURFACE MTD 25 KAIC SYMM
■ MLO: 200 AMPS
☐ MCB:

BRANCH LOAD	AMPS			CB/P	A B C		CB/P	AMPS			BRANCH LOAD
ICE MACHINE RECPT	6			20/1	43	44	20/1	3			ABOVE COUNTER RECPT
VENDING MACHINE RECPT		6		20/1	45	46	20/1		3		ABOVE COUNTER RECPT
VENDING MACHINE RECPT			6	20/1	47	48	20/1			3	ABOVE COUNTER RECPT
RECEPTACLES	6			20/1	49	50	20/1	3			ABOVE COUNTER RECPT
RECEPTACLES		6		20/1	51	52	20/1		3		ABOVE COUNTER RECPT
RECEPTACLES			6	20/1	53	54	20/1			3	ABOVE COUNTER RECPT
RECEPTACLES	6			20/1	55	56	20/1	3			ABOVE COUNTER RECPT
RECEPTACLES		6		20/1	57	58	20/1		6		REFERIGEREATOR RECPT
RECEPTACLES			1.5	20/1	59	60	20/1			6	REFERIGEREATOR RECPT
TV RECEPTACLE	6			20/1	61	62	20/1	3			ABOVE COUNTER RECPT
RECEPTACLES		6		20/1	63	64	20/1		3		ABOVE COUNTER RECPT
TV RECEPTACLE			6	20/1	65	66	20/1			3	ABOVE COUNTER RECPT
RECEPTACLES	4.5			20/1	67	68	20/1	3			ABOVE COUNTER RECPT
RECEPTACLES		4.5		20/1	69	70	20/1		3		ABOVE COUNTER RECPT
PRINTER RECEPT			6	20/1	71	72	20/1			3	TV RECEPTACLE
RECEPTACLES	3			20/1	73	74	20/1				SPARE
RECEPTACLES		3		20/1	75	76	20/1				SPARE
SPARE				20/1	77	78	20/1				SPARE
SPARE				20/1	79	80	20/1				SPARE
SPARE				20/1	81	82	20/1				SPARE
SPARE				20/1	83	84	20/1				SPARE

TOTAL AMPS: A PH = 46.5 B PH = 49.5 C PH = 43.5

■ EQUIPMENT GROUND BAR ■ FEED-THRU LUGS

FEEDER: 4-4/0, #4 EGC IN 2 1/2" CND. * NEC 220.12 ** NEC 220.44 *** NONCOINCIDENT NEC 220.60

NOTE: PROVIDE ROOM NUMBER AND LOAD DESCRIPTION FOR BRANCH CIRCUIT ON DIRECTORY CARDS.

PANELBOARD "RPB" (SECTION #3 OF 3)

120/208 VOLTS 3PH, 4W
SURFACE MTD 25 KAIC SYMM
■ MLO: 200 AMPS
☐ MCB:

BRANCH LOAD	AMPS			CB/P	A B C		CB/P	AMPS			BRANCH LOAD
RECEPTACLES	6			20/1	85	86	20/1	1			SEC PANEL
RECEPTACLES		4.5		20/1	87	88	20/1		1		FACP PANEL
RECEPTACLES			3	20/1	89	90	20/1			1	MATV PANEL
RECEPTACLES	3			20/1	91	92	20/1	1			ACS PANEL
SPARE				20/1	93	94	20/1				SPARE
SPARE				20/1	95	96	20/1				SPARE
SPARE				20/1	97	98	20/1				SPARE
SPARE				20/1	99	100	20/1				SPARE
SPARE				20/1	101	102	20/1				SPARE
SPARE				20/1	103	104	20/1				SPARE
SPACE				-/1	105	106	-/1				SPACE
SPACE				-/1	107	108	-/1				SPACE
SPACE				-/1	109	110	-/1				SPACE
SPACE				-/1	111	112	-/1				SPACE
SPACE				-/1	113	114	-/1				SPACE
SPACE				-/1	115	116	-/1				SPACE
SPACE				-/1	117	118	-/1				SPACE
SPACE				-/1	119	120	-/1				SPACE
SPACE				-/1	121	122	-/1				SPACE
SPACE				-/1	123	124	-/1				SPACE
SPACE				-/1	125	126	-/1				SPACE

TOTAL AMPS: A PH = 11 B PH = 5.5 C PH = 4

■ EQUIPMENT GROUND BAR

FEEDER: 4-4/0, #4 EGC IN 2 1/2" CND. * NEC 220.12 ** NEC 220.44 *** NONCOINCIDENT NEC 220.60

NOTE: PROVIDE ROOM NUMBER AND LOAD DESCRIPTION FOR BRANCH CIRCUIT ON DIRECTORY CARDS.

ELECTRICAL ROOM #232

LONG & ASSOCIATES
architects | engineers, inc.
4525 South Manhattan Avenue, Tampa, FL 33611-2305
T:813.839.0506 F:813.839.4616 AA:C001624 IB:26 CGC1511025
www.longandassociates.com

THIS DOCUMENT IS COPYRIGHT MATERIAL AND DISCLOSURE, UNAUTHORIZED USE, DISTRIBUTION OR DUPLICATION WITHOUT THE EXPRESS WRITTEN CONSENT OF LONG & ASSOCIATES IS PROHIBITED. ALL RIGHTS RESERVED

HILLSBOROUGH COUNTY SHERIFF'S OFFICE

PINEBROOK BUILDING 4 INTERIOR RENOVATION

1220 - 1238 TECH BLVD.
TAMPA, FL 33619

Seal

ROBERT A. RACE II, P.E.
PE 51483

No.	Date	Issues & Revisions

TO THE BEST OF THE ARCHITECT'S AND/OR ENGINEER'S KNOWLEDGE THESE PLANS AND SPECIFICATIONS COMPLY WITH THE APPLICABLE MINIMUM BUILDING CODES AND THE APPLICABLE FIRE-SAFETY STANDARDS

Phase: 100% CONSTRUCTION DRAWINGS
Drawn By: WM
Checked By: MF
Job No: 19002
Date: SEPTEMBER 20, 2019
9/19/2019 4:48:30 PM

PANELBOARD SCHEDULES

E6.2

PANELBOARD "DPC"

120/208 VOLTS 3PH, 4W — SURFACE MTD 42 KAIC SYMM — ☐ MLO: ■ MCB: 600 AMPS*****

BRANCH LOAD	AMPS A	AMPS B	AMPS C	CB/P	CKT	CKT	CB/P	AMPS A	AMPS B	AMPS C	BRANCH LOAD
SPARE				20/1	1	2	20/1				SPARE
SPARE				20/1	3	4	20/1				SPARE
SPARE				20/1	5	6	20/1				SPARE
SPARE				20/1	7	8	20/1				SPARE
SPACE				-/1	9	10	-/1				SPACE
SPACE				-/1	11	12	-/1				SPACE
SPACE				-/1	13	14	-/1				SPACE
SPACE				-/1	15	16	-/1				SPACE
SPACE				-/1	17	18	-/1				SPACE
PANEL "MPC"	244.6			300/3	19	20	150/3	19.2			PANEL "LPC"
-		241.6		-			-		15.7		-
-			241.6	-			-			12.2	-
PANEL "RPC"	112.5			150/3	25	26	30/3				SURGE SUPPRESSOR
-		96		-			-				-
-			100.5	-			-				-

TOTAL AMPS: A PH = 376.3 B PH = 353.3 C PH = 354.3

LOADS	CONN KVA	FACTOR	DMD KVA	DIVERSITY	DES KVA
LIGHTING	5.7	*	38.5	1.00	38.5
RECEPT	33.8	**	26.7	1.00	26.7
WATER HEATER	-	1.00	-	1.00	-
COOLING	-	1.00	-	1.00	-
HEATING	51.5	1.00	51.5	.8	41.2
LARGEST MOTOR	-	1.25	-	1.00	-
FANS	17.3	1.25	21.6	1.00	21.6
MISC	21.7	1.00	21.7	1.00	21.7
FUTURE	-	1.00	-	1.00	30.0
TOTALS	130.0 KVA		160.0 KVA		179.7 KVA

REMARKS: SQUARE D OR EQUIVALENT; 44" WIDE MAXIMUM

■ EQUIPMENT GROUND BAR

FEEDER: 2 SETS OF 4-350 KCMIL, #1/0 EGC IN 3" CNDS. * NEC 220.12 ** NEC 220.44 *** NONCOINCIDENT NEC 220.60

NOTE: PROVIDE ROOM NUMBER AND LOAD DESCRIPTION FOR BRANCH CIRCUIT ON DIRECTORY CARDS.

***** MCB SHALL BE PROVIDED WITH L,S,I ELECTRONIC ADJUSTABLE TRIP SETTINGS.

PANELBOARD "MPC"

120/208 VOLTS 3PH, 4W — SURFACE MTD 42 KAIC SYMM — ☐ MLO: ■ MCB: 300 AMPS

BRANCH LOAD	AMPS A	AMPS B	AMPS C	CB/P	CKT	CKT	CB/P	AMPS A	AMPS B	AMPS C	BRANCH LOAD
RTU - 9	28.2			****40/3	1	2	****40/3	28.2			RTU - 10
-		28.2		-			-		28.2		-
-			28.2	-			-			28.2	-
RTU - 11	36.5			****50/3	7	8	****50/3	33			RTU - 12
-		36.5		-			-		33		-
-			36.5	-			-			33	-
RTU - 13	33			****50/3	13	14	***40/3	28			RTU - 14
-		33		-			-		28		-
-			33	-			-			28	-
ROOF SERVICE RECPTS	3			20/1	19	20	****90/3	54.7			OAU-1
SPARE				20/1	21		-		54.7		-
SPARE				20/1	23		-			54.7	-
SPARE				20/1	25	26	20/1				SPARE
SPARE				20/1	27	28	20/1				SPARE
SPARE				20/1	29	30	20/1				SPARE
SPARE				20/1	31	32	20/1				SPARE
SPARE				20/1	33	34	20/1				SPARE
SPARE				20/1	35	36	20/1				SPARE
SPARE				20/1	37	38	30/3				SURGE SUPPRESOR
SPARE				20/1	39		-				-
SPARE				20/1	41		-				-

TOTAL AMPS: A PH = 244.6 B PH = 241.6 C PH = 241.6

LOADS	CONN KVA	FACTOR	DMD KVA	DIVERSITY	DES KVA
LIGHTING	-	*	-	1.00	-
RECEPT	0.4	**	0.4	1.00	0.4
WATER HEATER	-	1.00	-	1.00	-
COOLING	-	1.00	-	1.00	-
HEATING	51.5	1.00	51.5	.8	41.2
LARGEST MOTOR	-	1.25	-	1.00	-
FANS	17.3	1.25	21.6	1.00	21.6
MISC	18.1	1.00	18.1	1.00	18.1
FUTURE	-	1.00	-	1.00	16.3
TOTALS	87.3 KVA		91.6 KVA		97.6 KVA

REMARKS: SQUARE D OR EQUIVALENT

■ EQUIPMENT GROUND BAR

FEEDER: 4-400 KCMIL, #3 EGC IN 3" CND. * NEC 220.12 ** NEC 220.44 *** NONCOINCIDENT NEC 220.60

NOTE: PROVIDE ROOM NUMBER AND LOAD DESCRIPTION FOR BRANCH CIRCUIT ON DIRECTORY CARDS.

**** HACR RATED CB

PANELBOARD "LPC"

120/208 VOLTS 3PH, 4W — SURFACE MTD 42 KAIC SYMM — ☐ MLO: ■ MCB: 150 AMPS

BRANCH LOAD	AMPS A	AMPS B	AMPS C	CB/P	CKT	CKT	CB/P	AMPS A	AMPS B	AMPS C	BRANCH LOAD
CORRIDOR LIGHTS	4.1			20/1	1	2	20/1	7.9			LIGHTS
LIGHTS		6.3		20/1	3	4	20/1		9.4		LIGHTS
LIGHTS			5.7	20/1	5	6	20/1			6.5	LIGHTS
LIGHTS	7.2			20/1	7	8	20/1				SPARE
SPARE				20/1	9	10	20/1				SPARE
SPARE				20/1	11	12	20/1				SPARE
SPARE				20/1	13	14	20/1				SPARE
SPARE				20/1	15	16	20/1				SPARE
SPACE				-/1	17	18	20/1				SPARE
SPACE				-/1	19	20	30/3				SURGE SUPPRESOR
SPACE				-/1	21		-				-
SPACE				-/1	23		-				-

TOTAL AMPS: A PH = 19.2 B PH = 15.7 C PH = 12.2

LOADS	CONN KVA	FACTOR	DMD KVA	DIVERSITY	DES KVA
LIGHTING	5.7	*	38.5	1.00	38.5
RECEPT	-	**	-	1.00	-
WATER HEATER	-	1.00	-	1.00	-
COOLING	-	1.00	-	1.00	-
HEATING	-	1.00	-	.8	-
LARGEST MOTOR	-	1.25	-	1.00	-
FANS	-	1.25	-	1.00	-
MISC	-	1.00	-	1.00	-
FUTURE	-	1.00	-	1.00	7.7
TOTALS	5.7 KVA		38.5 KVA		46.2 KVA

REMARKS:

■ EQUIPMENT GROUND BAR

FEEDER: 4-2/0, #6 EGC IN 2" CND. * NEC 220.12 ** NEC 220.44 *** NONCOINCIDENT NEC 220.60

NOTE: PROVIDE ROOM NUMBER AND LOAD DESCRIPTION FOR BRANCH CIRCUIT ON DIRECTORY CARDS.

PANELBOARD "RPC" (SECTION #1 OF 2)

120/208 VOLTS 3PH, 4W — SURFACE MTD 42 KAIC SYMM — ☐ MLO: ■ MCB: 150 AMPS

BRANCH LOAD	AMPS A	AMPS B	AMPS C	CB/P	CKT	CKT	CB/P	AMPS A	AMPS B	AMPS C	BRANCH LOAD
RECEPTACLES	6			20/1	1	2	20/1	6			RECEPTACLES
RECEPTACLES		6		20/1	3	4	20/1		4.5		RECEPTACLES
RECEPTACLES			6	20/1	5	6	20/1			4.5	RECEPTACLES
RECEPTACLES	6			20/1	7	8	20/1	6			RECEPTACLES
RECEPTACLES		6		20/1	9	10	20/1		6		RECEPTACLES
RECEPTACLES			6	20/1	11	12	20/1			6	RECEPTACLES
RECEPTACLES	6			20/1	13	14	20/1	6			RECEPTACLES
RECEPTACLES		6		20/1	15	16	20/1		6		PRINTER RECEPTACLE
RECEPTACLES			7.5	20/1	17	18	20/1			6	RECEPTACLES
RECEPTACLES	3			20/1	19	20	20/1	6			RECEPTACLES
PRINTER RECEPTACLE		6		20/1	21	22	20/1		6		RECEPTACLES
RECEPTACLES			3	20/1	23	24	20/1			6	RECEPTACLES
RECEPTACLES	6			20/1	25	26	20/1	6			RECEPTACLES
RECEPTACLES		6		20/1	27	28	20/1				SPARE
RECEPTACLES			6	20/1	29	30	20/1				SPARE
RECEPTACLES	6			20/1	31	32	20/1				SPARE
SPARE				20/1	33	34	20/1				SPARE
SPARE				20/1	35	36	20/1				SPARE
SPARE				30/3	37	38	30/3				SURGE SUPPRESOR
SPARE				20/1	39		-				-
SPARE				20/1	41		-				-

TOTAL AMPS: A PH = 112.5 B PH = 96 C PH = 100.5

LOADS	CONN KVA	FACTOR	DMD KVA	DIVERSITY	DES KVA
LIGHTING	-	*	-	1.00	-
RECEPT	33.4	**	26.4	1.00	26.4
WATER HEATER	-	1.00	-	1.00	-
COOLING	-	1.00	-	1.00	-
HEATING	-	1.00	-	.8	-
LARGEST MOTOR	-	1.25	-	1.00	-
FANS	-	1.25	-	1.00	-
MISC	3.6	1.00	3.6	1.00	3.6
FUTURE	-	1.00	-	1.00	6.0
TOTALS	37.0 KVA		30.0 KVA		36.0 KVA

REMARKS: SQUARE D OR EQUIVALENT

■ EQUIPMENT GROUND BAR ■ FEED-THRU LUGS

FEEDER: 4-2/0, #6 EGC IN 2" CND. * NEC 220.12 ** NEC 220.44 *** NONCOINCIDENT NEC 220.60

NOTE: PROVIDE ROOM NUMBER AND LOAD DESCRIPTION FOR BRANCH CIRCUIT ON DIRECTORY CARDS.

ELECTRICAL ROOM #259

PANELBOARD "RPC" (SECTION #2 OF 2)

120/208 VOLTS 3PH, 4W — SURFACE MTD 42 KAIC SYMM — ■ MLO: 150 AMPS ☐ MCB:

BRANCH LOAD	AMPS A	AMPS B	AMPS C	CB/P	CKT	CKT	CB/P	AMPS A	AMPS B	AMPS C	BRANCH LOAD
RECEPTACLES	6			20/1	43	44	20/1	3			RECEPTACLES
RECEPTACLES		6		20/1	45	46	20/1		3		RECEPTACLES
RECEPTACLES			6	20/1	47	48	20/1			6	RECEPTACLES
RECEPTACLES	6			20/1	49	50	20/1	6			RECEPTACLES
RECEPTACLES		6		20/1	51	52	20/1		6		RECEPTACLES
RECEPTACLES			6	20/1	53	54	20/1			6	RECEPTACLES
RECEPTACLES	4.5			20/1	55	56	20/1	6			RECEPTACLES
REC & PROJECTOR SCREEN		6		20/1	57	58	20/1		6		RECEPTACLES
TV RECEPTACLE			6	20/1	59	60	20/1			3	FLOOR RECEPTACLE
CELING RECEPTACLE	3			20/1	61	62	20/1	6			TV RECEPTACLE
RECEPTACLES		4.5		20/1	63	64	20/1		3		RECEPTACLES
RECEPTACLES			4.5	20/1	65	66	20/1			3	RECEPTACLES
RECEPTACLES	3			20/1	67	68	20/1	6			RECEPTACLES
RECEPTACLES		3		20/1	69	70	20/1		3		RECEPTACLES
RECEPTACLES			3	20/1	71	72	20/1			6	TV RECEPTACLE
SPARE				20/1	73	74	20/1				SPARE
SPARE				20/1	75	76	20/1				SPARE
SPARE				20/1	77	78	20/1				SPARE
SPARE				20/1	79	80	20/1				SPARE
SPARE				20/1	81	82	20/1				SPARE
SPARE				20/1	83	84	20/1				SPARE

TOTAL AMPS: A PH = 49.5 B PH = 43.5 C PH = 49.5

■ EQUIPMENT GROUND BAR

FEEDER: 4-2/0, #6 EGC IN 2" CND. * NEC 220.12 ** NEC 220.44 *** NONCOINCIDENT NEC 220.60

NOTE: PROVIDE ROOM NUMBER AND LOAD DESCRIPTION FOR BRANCH CIRCUIT ON DIRECTORY CARDS.

PANELBOARD "DPD"

120/208 VOLTS 3PH, 4W — SURFACE MTD 30 KAIC SYMM — ☐ MLO: ■ MCB: 600 AMPS*****

BRANCH LOAD	AMPS A	AMPS B	AMPS C	CB/P	CKT	CKT	CB/P	AMPS A	AMPS B	AMPS C	BRANCH LOAD
SPARE				20/1	1	2	20/1				SPARE
SPARE				20/1	3	4	20/1				SPARE
SPARE				20/1	5	6	20/1				SPARE
SPARE				20/1	7	8	20/1				SPARE
SPACE				-/1	9	10	-/1				SPACE
SPACE				-/1	11	12	-/1				SPACE
SPACE				-/1	13	14	-/1				SPACE
SPACE				-/1	15	16	-/1				SPACE
SPACE				-/1	17	18	-/1				SPACE
PANEL "MPD"	130.5			225/3	19	20	125/3	17.7			PANEL "LPD"
-		133.6		-			-		14.7		-
-			133.6	-			-			10.9	-
PANEL "RPD"	183			250/3	25	26	30/3				SURGE SUPPRESOR
-		197		-			-				-
-			166.5	-			-				-

TOTAL AMPS: A PH = 331.2 B PH = 345.2 C PH = 311.0

LOADS	CONN KVA	FACTOR	DMD KVA	DIVERSITY	DES KVA
LIGHTING	5.2	*	29.9	1.00	29.9
RECEPT	31.8	**	25.3	1.00	25.3
WATER HEATER	5.2	1.00	5.2	1.00	5.2
COOLING	8.2	1.00	8.2	1.00	8.2
HEATING	12.7	1.00	12.7	1.00	12.7
LARGEST MOTOR	-	1.25	-	1.00	-
FANS	8.9	1.25	11.1	1.00	11.1
MISC	46.5	1.00	46.5	1.00	46.5
FUTURE	-	1.00	-	1.00	27.8
TOTALS	118.5 KVA		138.9 KVA		166.7 KVA

REMARKS: SQUARE D OR EQUIVALENT; 44" WIDE MAXIMUM

■ EQUIPMENT GROUND BAR

FEEDER: 2 SETS OF 4-350 KCMIL, #1/0 EGC IN 3" CNDS. * NEC 220.12 ** NEC 220.44 *** NONCOINCIDENT NEC 220.60

NOTE: PROVIDE ROOM NUMBER AND LOAD DESCRIPTION FOR BRANCH CIRCUIT ON DIRECTORY CARDS.

***** MCB SHALL BE PROVIDED WITH L,S,I ELECTRONIC ADJUSTABLE TRIP SETTINGS.

PANELBOARD "MPD"

120/208 VOLTS 3PH, 4W — SURFACE MTD 25 KAIC SYMM — ☐ MLO: ■ MCB: 225 AMPS

BRANCH LOAD	AMPS A	AMPS B	AMPS C	CB/P	CKT	CKT	CB/P	AMPS A	AMPS B	AMPS C	BRANCH LOAD
RTU -6	34			****50/3	1	2	****50/3	32.8			RTU -7
-		34		-			-		32.8		-
-			34	-			-			32.8	-
RTU -8	28.2			****40/3	7	8	20/1	1.5			ROOF EXHAUST FAN
-		28.2		-		10	20/1				SPARE
-			28.2	-		12	20/1				SPARE
ACU-1/CU-1	17			20/2	13	14	20/1				SPARE
-		17		-		16	20/1				SPARE
ACU-2/CU-2			17	20/2	17	18	20/1				SPARE
-	17			-		20	20/1				SPARE
WATER HEATER "WH-1"		21.6		30/2	21	22	20/1				SPARE
-			21.6	-		24	20/1				SPARE
SPARE				20/1	25	26	20/1				SPARE
SPARE				20/1	27	28	20/1				SPARE
SPARE				20/1	29	30	20/1				SPARE
SPARE				20/1	31	32	20/1				SPARE
SPARE				20/1	33	34	20/1				SPARE
SPARE				20/1	35	36	20/1				SPARE
SPARE				20/1	37	38	30/3				SURGE SUPPRESOR
SPARE				20/1	39		-				-
SPARE				20/1	41		-				-

TOTAL AMPS: A PH = 130.5 B PH = 133.6 C PH = 133.6

LOADS	CONN KVA	FACTOR	DMD KVA	DIVERSITY	DES KVA
LIGHTING	-	*	-	1.00	-
RECEPT	-	**	-	1.00	-
WATER HEATER	5.2	1.00	5.2	1.00	5.2
COOLING	8.2	1.00	8.2	1.00	8.2
HEATING	12.7	1.00	12.7	1.00	12.7
LARGEST MOTOR	-	1.25	-	1.00	-
FANS	8.9	1.25	11.1	1.00	11.1
MISC	12.7	1.00	12.7	1.00	12.7
FUTURE	-	1.00	-	1.00	10.0
TOTALS	47.7 KVA		49.9 KVA		59.9 KVA

REMARKS: SQUARE D OR EQUIVALENT

■ EQUIPMENT GROUND BAR

FEEDER: 4-4/0, #4 EGC IN 2 1/2" CND. * NEC 220.12 ** NEC 220.44 *** NONCOINCIDENT NEC 220.60

NOTE: PROVIDE ROOM NUMBER AND LOAD DESCRIPTION FOR BRANCH CIRCUIT ON DIRECTORY CARDS.

**** HACR RATED CB

PANELBOARD "LPD"

120/208 VOLTS 3PH, 4W — SURFACE MTD 25 KAIC SYMM — ☐ MLO: ■ MCB: 125 AMPS

BRANCH LOAD	AMPS A	AMPS B	AMPS C	CB/P	CKT	CKT	CB/P	AMPS A	AMPS B	AMPS C	BRANCH LOAD
CORRIDOR LIGHTS	7.2			20/1	1	2	20/1	10.5			LIGHTS
LIGHTS		7.6		20/1	3	4	20/1		7.1		LIGHTS
LIGHTS			5.6	20/1	5	6	20/1			5.3	LIGHTS
SPARE				20/1	7	8	20/1				SPARE
SPARE				20/1	9	10	20/1				SPARE
SPARE				20/1	11	12	20/1				SPARE
SPARE				20/1	13	14	20/1				SPARE
SPARE				20/1	15	16	20/1				SPARE
SPACE				-/1	17	18	20/1				SPARE
SPACE				-/1	19	20	30/3				SURGE SUPPRESOR
SPACE				-/1	21		-				-
SPACE				-/1	23		-				-

TOTAL AMPS: A PH = 17.7 B PH = 14.7 C PH = 10.9

LOADS	CONN KVA	FACTOR	DMD KVA	DIVERSITY	DES KVA
LIGHTING	5.2	*	29.9	1.00	29.9
RECEPT	-	**	-	1.00	-
WATER HEATER	-	1.00	-	1.00	-
COOLING	-	1.00	-	1.00	-
HEATING	-	1.00	-	.8	-
LARGEST MOTOR	-	1.25	-	1.00	-
FANS	-	1.25	-	1.00	-
MISC	-	1.00	-	1.00	-
FUTURE	-	1.00	-	1.00	6
TOTALS	5.2 KVA		29.9 KVA		35.9 KVA

REMARKS: SQUARE D OR EQUIVALENT

■ EQUIPMENT GROUND BAR

FEEDER: 4-1/0, #6 EGC IN 2" CND. * NEC 220.12 ** NEC 220.44 *** NONCOINCIDENT NEC 220.60

NOTE: PROVIDE ROOM NUMBER AND LOAD DESCRIPTION FOR BRANCH CIRCUIT ON DIRECTORY CARDS.

PANELBOARD "RPD" (SECTION #1 OF 3)

120/208 VOLTS 3PH, 4W — SURFACE MTD 25 KAIC SYMM — ☐ MLO: ■ MCB: 250 AMPS

BRANCH LOAD	AMPS A	AMPS B	AMPS C	CB/P	CKT	CKT	CB/P	AMPS A	AMPS B	AMPS C	BRANCH LOAD
SPARE				20/1	1	2	20/1				SPARE
MDF QUAD RECEPTACLES		10		20/1	3	4	20/1		10		MDF QUAD RECEPTACLES
MDF QUAD RECEPTACLES			10	20/1	5	6	20/1			10	MDF QUAD RECEPTACLES
MDF QUAD RECEPTACLES	10			20/1	7	8	20/1	10			MDF QUAD RECEPTACLES
MDF QUAD RECEPTACLES		10		20/1	9	10	20/1		10		MDF QUAD RECEPTACLES
MDF QUAD RECEPTACLES			10	20/1	11	12	20/1			6	MDF DUBLEX RECEPTACLES
MDF QUAD RECEPTACLES	10			20/1	13	14	20/1	9			MDF DUBLEX RECEPTACLES
MDF QUAD RECEPTACLES		10		20/1	15	16	20/1		3		RECEPTACLE
MDF QUAD RECEPTACLES			10	20/1	17	18	20/1			3	RECEPTACLE
MDF QUAD RECEPTACLES	10			20/1	19	20	20/1	6			PRINTER RECEPTACLE
MDF QUAD RECEPTACLES		10		20/1	21	22	20/1		6		RECEPTACLE
MDF QUAD RECEPTACLES			10	20/1	23	24	20/1			6	RECEPTACLE
MDF QUAD RECEPTACLES	10			20/1	25	26	20/1	6			RECEPTACLE
MDF QUAD RECEPTACLES		10		20/1	27	28	20/1				SPARE
MDF QUAD RECEPTACLES			10	20/1	29	30	20/1				SPARE
MDF QUAD RECEPTACLES	10			20/1	31	32	20/1				SPARE
MDF QUAD RECEPTACLES		10		20/1	33	34	20/1				SPARE
SPARE				20/1	35	36	20/1				SPARE
SPARE				30/3	37	38	30/3				SURGE SUPPRESOR
SPARE				20/1	39		-				-
SPARE				20/1	41		-				-

TOTAL AMPS: A PH = 183 B PH = 197 C PH = 166.5

LOADS	CONN KVA	FACTOR	DMD KVA	DIVERSITY	DES KVA
LIGHTING	-	*	-	1.00	-
RECEPT	31.8	**	25.3	1.00	25.3
WATER HEATER	-	1.00	-	1.00	-
COOLING	-	1.00	-	1.00	-
HEATING	-	1.00	-	.8	-
LARGEST MOTOR	-	1.25	-	1.00	-
FANS	-	1.25	-	1.00	-
MISC	33.7	1.00	33.7	1.00	33.7
FUTURE	-	1.00	-	1.00	11.8
TOTALS	65.5 KVA		59 KVA		70.8 KVA

REMARKS: SQUARE D OR EQUIVALENT

■ EQUIPMENT GROUND BAR ■ FEED-THRU LUGS

FEEDER: 4-300 KCMIL, #4 EGC IN 3" CNDS. * NEC 220.12 ** NEC 220.44 *** NONCOINCIDENT NEC 220.60

NOTE: PROVIDE ROOM NUMBER AND LOAD DESCRIPTION FOR BRANCH CIRCUIT ON DIRECTORY CARDS.

PANELBOARD "RPD" (SECTION #2 OF 3)

120/208 VOLTS 3PH, 4W — SURFACE MTD 25 KAIC SYMM — ■ MLO: 250 AMPS ☐ MCB:

BRANCH LOAD	AMPS A	AMPS B	AMPS C	CB/P	CKT	CKT	CB/P	AMPS A	AMPS B	AMPS C	BRANCH LOAD
RECEPTACLES	6			20/1	43	44	20/1	3			RECEPTACLES
RECEPTACLES		6		20/1	45	46	20/1		6		RECEPTACLES
RECEPTACLES			7.5	20/1	47	48	20/1			3	RECEPTACLES
RECEPTACLES	6			20/1	49	50	20/1	4.5			RECEPTACLES
RECEPTACLES		6		20/1	51	52	20/1		6		RECEPTACLES
RECEPTACLES			4.5	20/1	53	54	20/1			6	RECEPTACLES
RECEPTACLES	3			20/1	55	56	20/1	6			RECEPTACLES
ABOVE COUNTER RECPT		3		20/1	57	58	20/1		6		RECEPTACLES
ABOVE COUNTER RECPT			3	20/1	59	60	20/1			7.5	RECEPTACLES
ABOVE COUNTER RECPT	3			20/1	61	62	20/1	6			RECEPTACLES
ABOVE COUNTER RECPT		3		20/1	63	64	20/1		6		RECEPTACLES
RECEPTACLES			6	20/1	65	66	20/1			6	RECEPTACLES
RECEPTACLES	6			20/1	67	68	20/1	7.5			RECEPTACLES
RECEPTACLES		6		20/1	69	70	20/1		6		RECEPTACLES
RECEPTACLES			6	20/1	71	72	20/1			6	RECEPTACLES
RECEPTACLES	6			20/1	73	74	20/1				SPARE
SPARE				20/1	75	76	20/1				SPARE
SPARE				20/1	77	78	20/1				SPARE
SPARE				20/1	79	80	20/1				SPARE
SPARE				20/1	81	82	20/1				SPARE
SPARE				20/1	83	84	20/1				SPARE

TOTAL AMPS: A PH = 57 B PH = 54 C PH = 55.5

■ EQUIPMENT GROUND BAR ■ FEED-THRU LUGS

FEEDER: 4-300 KCMIL, #4 EGC IN 3" CND. * NEC 220.12 ** NEC 220.44 *** NONCOINCIDENT NEC 220.60

NOTE: PROVIDE ROOM NUMBER AND LOAD DESCRIPTION FOR BRANCH CIRCUIT ON DIRECTORY CARDS.

PANELBOARD "RPD" (SECTION #3 OF 3)

120/208 VOLTS 3PH, 4W — SURFACE MTD 25 KAIC SYMM — ■ MLO: 250 AMPS ☐ MCB:

BRANCH LOAD	AMPS A	AMPS B	AMPS C	CB/P	CKT	CKT	CB/P	AMPS A	AMPS B	AMPS C	BRANCH LOAD
RECEPTACLES	7.5			20/1	85	86	20/1	6			RECEPTACLES
RECEPTACLES		4.5		20/1	87	88	20/1		7.5		RECEPTACLES
RECEPTACLES			3	20/1	89	90	20/1			6	TV RECEPTACLE
RECEPTACLES	3			20/1	91	92	20/1	6			RECEPTACLES
RECEPTACLES		6		20/1	93	94	20/1		6		RECEPTACLES
RECEPTACLES			6	20/1	95	96	20/1			3	FLOOR RECEPTACLE
RECEPTACLES	3			20/1	97	98	20/1	3			CEILING RECEPTACLE
PRINTER RECEPTACLE		6		20/1	99	100	20/1		6		RECEPTACLES
ABOVE COUNTER RECPT			3	20/1	101	102	20/1			6	RECEPTACLES
ABOVE COUNTER RECPT	3			20/1	103	104	20/1	6			RECEPTACLES
ABOVE COUNTER RECPT		3		20/1	105	106	20/1		6		RECEPTACLES
ABOVE COUNTER RECPT			3	20/1	107	108	20/1			3	EXTERIOR RECEPTACLES
FLOOR RECEPTACLE	3			20/1	109	110	20/1	1			SEC PANEL
ABOVE COUNTER RECPT		3		20/1	111	112	20/1		1		FACP PANEL
ABOVE COUNTER RECPT			3	20/1	113	114	20/1			1	MATV PANEL
RECEPTACLES	4.5			20/1	115	116	20/1	1			ACS PANEL
PRINTER RECEPTACLE		6		20/1	117	118	20/1				SPARE
SPARE				20/1	119	120	20/1				SPARE
SPARE				20/1	121	122	20/1				SPARE
SPARE				20/1	123	124	20/1				SPARE
SPARE				20/1	125	126	20/1				SPARE
SPARE				20/1	127	128	20/1				SPARE
SPARE				20/1	129	130	20/1				SPARE
SPARE				20/1	131	132	20/1				SPARE
SPARE				20/1	133	134	20/1				SPARE
SPARE				20/1	135	136	20/1				SPARE
SPARE				20/1	137	138	20/1				SPARE

TOTAL AMPS: A PH = 45 B PH = 54 C PH = 40

■ EQUIPMENT GROUND BAR

FEEDER: 4-300 KCMIL, #4 EGC IN 3" CND. * NEC 220.12 ** NEC 220.44 *** NONCOINCIDENT NEC 220.60

NOTE: PROVIDE ROOM NUMBER AND LOAD DESCRIPTION FOR BRANCH CIRCUIT ON DIRECTORY CARDS.

ELECTRICAL ROOM #232

LONG & ASSOCIATES
architects | engineers, inc.
4525 South Manhattan Avenue, Tampa, FL 33611-2305
T:813.839.0506 F:813.839.4616 AA:C001624 IB:26 CGC1511025
www.longandassociates.com

THIS DOCUMENT IS COPYRIGHT MATERIAL AND DISCLOSURE, UNAUTHORIZED USE, DISTRIBUTION OR DUPLICATION WITHOUT THE EXPRESS WRITTEN CONSENT OF LONG & ASSOCIATES IS PROHIBITED. ALL RIGHTS RESERVED

HILLSBOROUGH COUNTY SHERIFF'S OFFICE

PINEBROOK BUILDING 4 INTERIOR RENOVATION

1220 - 1238 TECH BLVD.
TAMPA, FL 33619

Seal

ROBERT A. RACE II, P.E.
PE 51483

No.	Date	Issues & Revisions

TO THE BEST OF THE ARCHITECT'S AND/OR ENGINEER'S KNOWLEDGE THESE PLANS AND SPECIFICATIONS COMPLY WITH THE APPLICABLE MINIMUM BUILDING CODES AND THE APPLICABLE FIRE-SAFETY STANDARDS

Phase: 100% CONSTRUCTION DRAWINGS
Drawn By: JK
Checked By: RAR
Job No: 19002
Date: SEPTEMBER 20, 2019
9/19/2019 4:48:37 PM

PANELBOARD SCHEDULES

E6.3

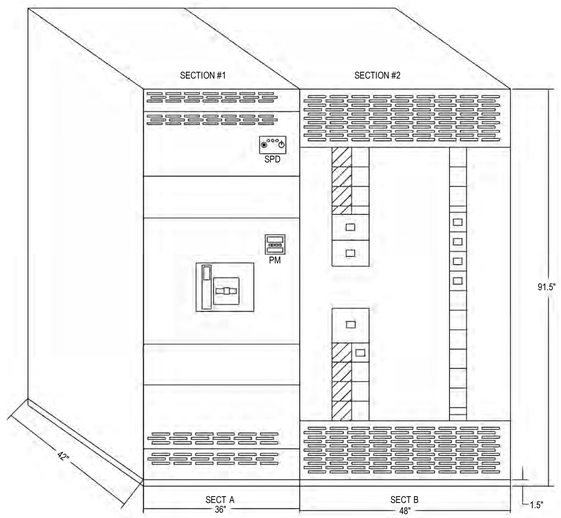

MAIN SWITCHBOARD - MSP				
SECTION #1				
FEEDER: 5 SETS OF 4-750 KCMIL CU, IN 5" CNDS 208/120 VOLTS 3 PHASE 4 WIRE ■ 2,000/2,000 AMPERE MAIN BREAKER (FRAME/SENSOR RATING) 2,000 A BUS RATING 65,000 RMS SYMM FAULT RATING UL LISTED 100% RATED MCB WITH ADJUSTABLE L,S,I,G SETTINGS			■ NEMA-3R ■ BOTTOM FED MCB ■ METERING PACKAGE ■ INTEGRAL SPD ■ FULL NEUTRAL ■ SHUNT-TRIP MCB	
SECTION #2				
2,000 A BUS RATING ■ FULL NEUTRAL				
DSGN	LOAD	■ CB □ FS	FEEDER OR BRANCH SIZE	REMARKS
1	PANEL DPA	400/3	SEE PANEL SCHEDULE FOR FEEDER SIZE	
2	PANEL DPB	500/3	SEE PANEL SCHEDULE FOR FEEDER SIZE	
3	PANEL DPC	600/3	SEE PANEL SCHEDULE FOR FEEDER SIZE	
4	PANEL DPD	600/3	SEE PANEL SCHEDULE FOR FEEDER SIZE	
5	SPARE	200/3	-	SPACE FOR FUTURE CB
6	SPARE	200/3	-	SPACE FOR FUTURE CB
7	SPARE	100/3	-	SPACE FOR FUTURE CB

LONG & ASSOCIATES
architects | engineers, inc.
4525 South Manhattan Avenue, Tampa, FL 33611-2305
T:813.839.0506 F:813.839.4616 AAC0010424 IBDB CGC1511025
www.longandassociates.com

THIS DOCUMENT IS COPYRIGHTED MATERIAL AND THE CONTENTS OF THIS DOCUMENT MAY NOT BE REPRODUCED OR DISTRIBUTED WITHOUT THE EXPRESS WRITTEN CONSENT OF LONG & ASSOCIATES. ALL RIGHTS RESERVED.

HILLSBOROUGH COUNTY SHERIFF'S OFFICE

PINEBROOK BUILDING 4 INTERIOR RENOVATION

1220 - 1238 TECH BLVD.
TAMPA, FL 33619

Seal

ROBERT A. RACE II, P.E.
PE 51483

No.	Date	Issues & Revisions

TO THE BEST OF THE ARCHITECT'S AND/OR ENGINEER'S KNOWLEDGE THESE PLANS AND SPECIFICATIONS COMPLY WITH THE APPLICABLE MINIMUM BUILDING CODES AND THE APPLICABLE FIRE-SAFETY STANDARDS

Phase: 100% CONSTRUCTION DRAWINGS
Drawn By: JK
Checked By: RAR
Job No: 19002
Date: SEPTEMBER 20, 2019
9/19/2019 4:48:39 PM

SWITCHBOARD ELEVATION AND SCHEDULE

E6.4

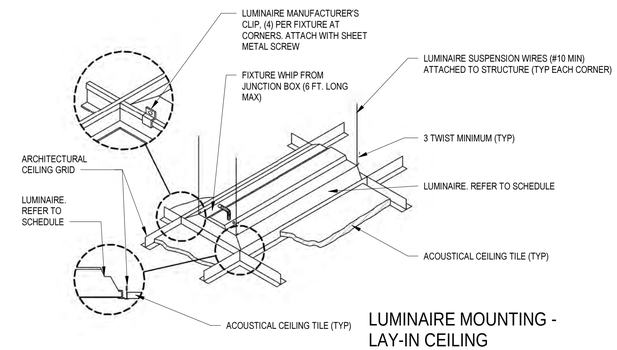

7 LUMINAIRE MOUNTING - LAY-IN CEILING DETAIL
SCALE: NTS

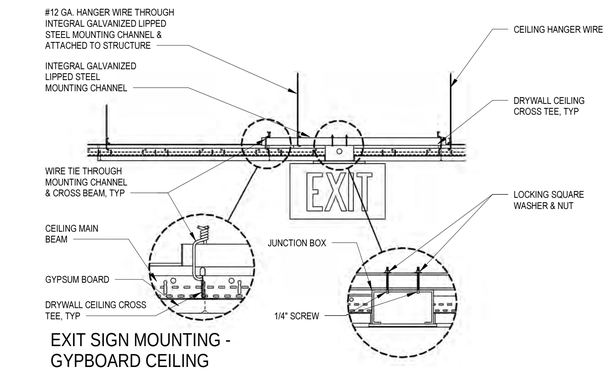

4 EXIT SIGN MOUNTING - GYPBOARD CEILING DETAIL
SCALE: NTS

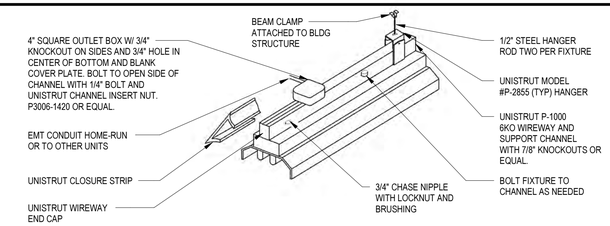

3 PENDANT MOUNTED FIXTURE DETAIL
Scale: 1/8" = 1'-0"

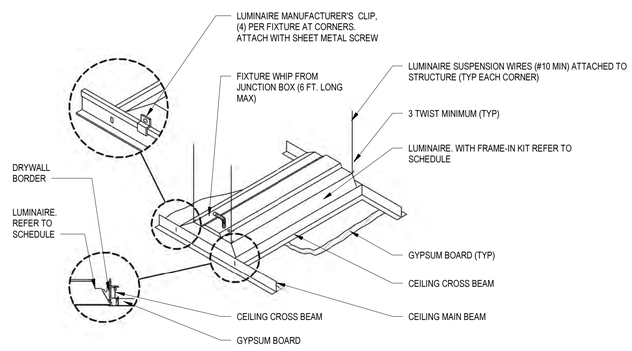

6 LUMINAIRE MOUNTING - GYPBOARD CEILING DETAIL
SCALE: NTS

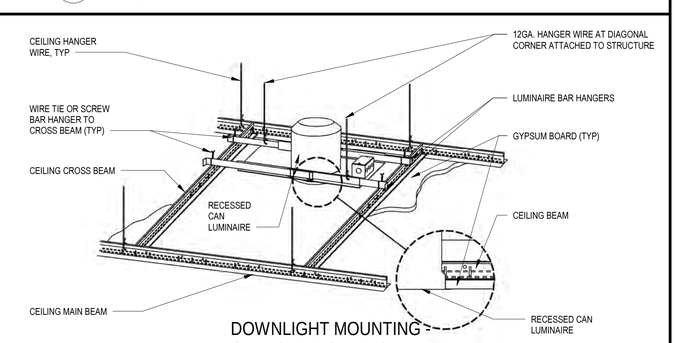

2 DOWNLIGHT MOUNTING - GYPBOARD CEILING DETAIL
SCALE: NTS

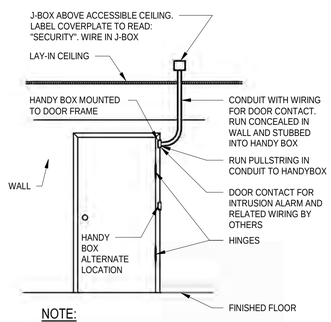

NOTE:
RUN ALL CONDUITS FOR SECURITY INTRUSION CONCEALED IN WALLS OR ABOVE CEILING

9 SECURITY SWITCH DETAIL
SCALE: NTS

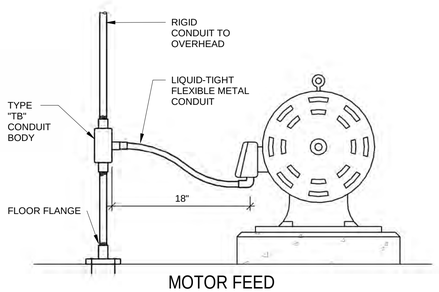

8 MOTOR FEED DETAIL
SCALE: NTS

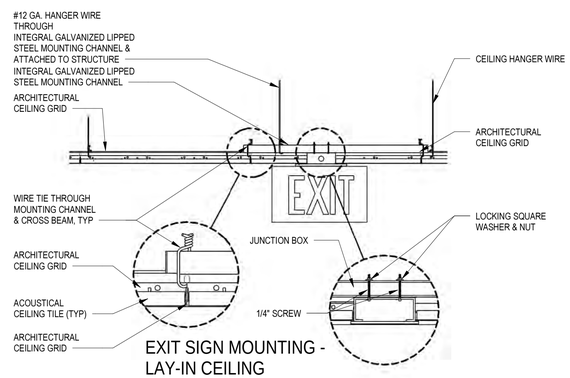

5 EXIT SIGN MOUNTING - LAY-IN CEILING DETAIL
SCALE: NTS

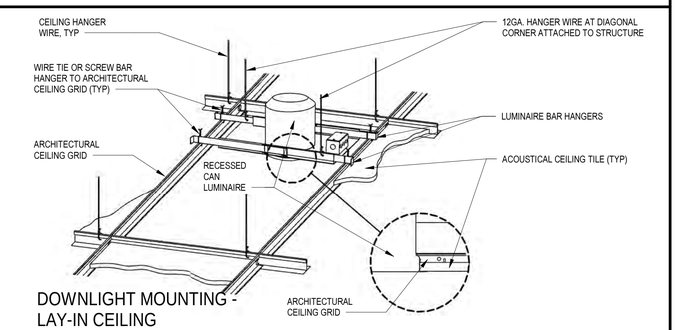

1 DOWNLIGHT MOUNTING - LAY-IN CEILING DETAIL
SCALE: NTS

LONG & ASSOCIATES
architects | engineers, inc.
4525 South Manhattan Avenue, Tampa, FL 33611-2305
T:813.839.0506 F:813.839.4616 AA C001624 IB28 CGC1511025
www.longandassociates.com

THIS DOCUMENT IS COPYRIGHTED IN A NOTICE FORM. OWNERSHIP IS RETAINED BY THE ARCHITECT. REPRODUCTION IS EXPRESSLY PROHIBITED WITHOUT THE CONSENT OF LONG & ASSOCIATES. ALL RIGHTS RESERVED.

HILLSBOROUGH COUNTY SHERIFF'S OFFICE

PINEBROOK BUILDING 4 INTERIOR RENOVATION

1220 - 1238 TECH BLVD.
TAMPA, FL 33619

Seal

ROBERT A. RACE II, P.E.
PE 51483

No.	Date	Issues & Revisions

TO THE BEST OF THE ARCHITECT'S AND/OR ENGINEER'S KNOWLEDGE THESE PLANS AND SPECIFICATIONS COMPLY WITH THE APPLICABLE MINIMUM BUILDING CODES AND THE APPLICABLE FIRE-SAFETY STANDARDS

Phase: 100% CONSTRUCTION DRAWINGS
Drawn By: XG
Checked By: RAR
Job No: 19002
Date: SEPTEMBER 20, 2019
9/19/2019 4:48:43 PM

DETAILS

E7.1

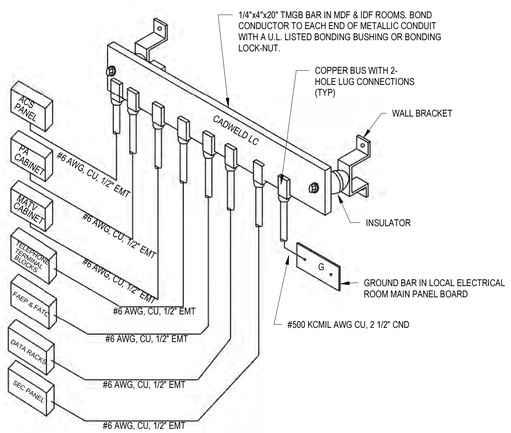

10 GROUNDING BAR DETAIL
SCALE: NTS

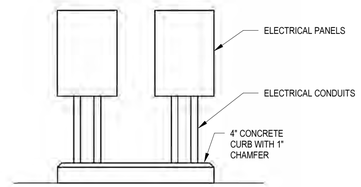

7 CURB DETAIL
SCALE: NTS

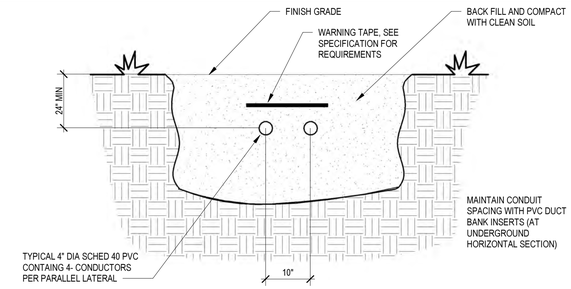

3 SECONDARY SERVICE LATERAL DUCT BANK SECTION
SCALE: NTS

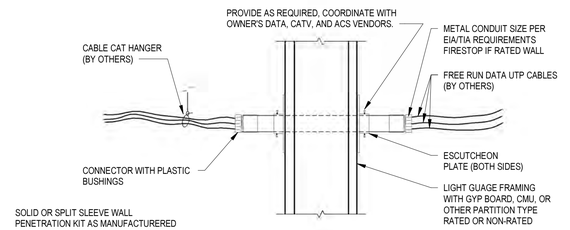

6 ELECTRICAL WALL PENETRATION TYPICAL SECTION
SCALE: NTS

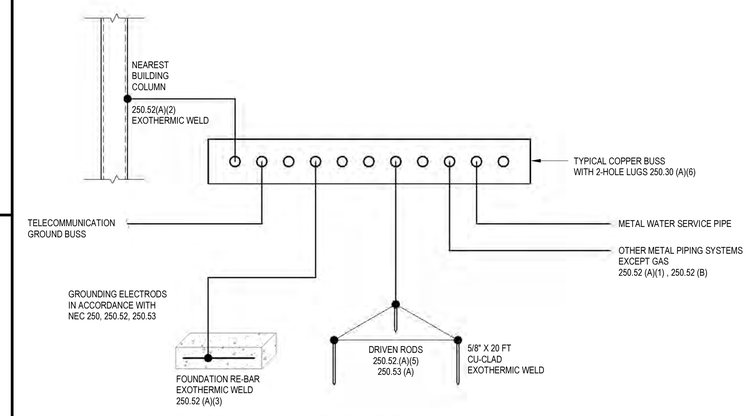

2 GROUNDING SCHEMATIC
SCALE: NTS

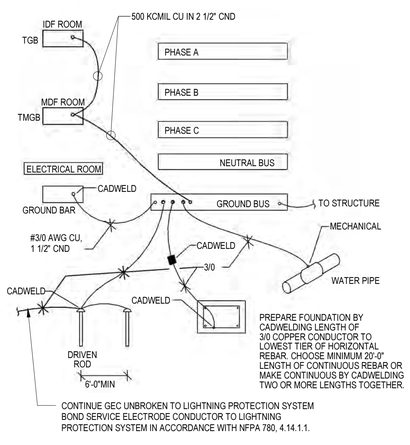

9 GROUNDING ELECTRODE
SCALE: NTS

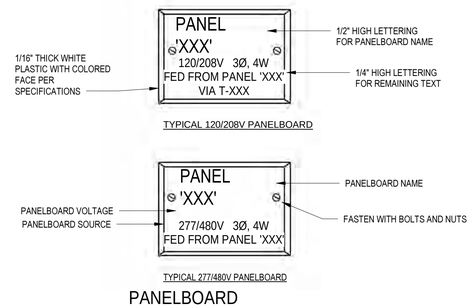

5 PANELBOARD NAMEPLATE DETAIL
SCALE: NTS

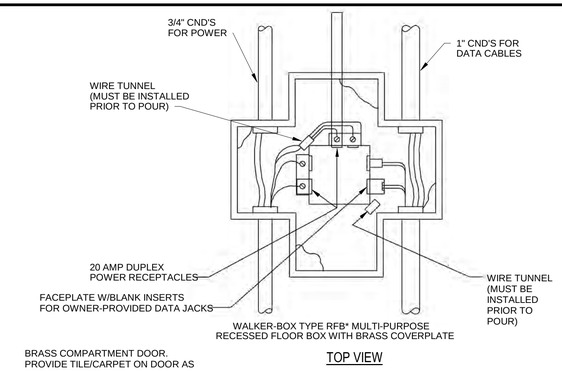

NOTE:
FLOOR BOXES INSTALLED IN VCT FLOORS SHALL BE U.L. LISTED TO MEET SCRUB TEST. PROVIDE APPROPRIATE FLANGE FOR FLOOR COVERING SURROUNDING BOX.

1 SPECIAL FLOOR BOX DETAILS
SCALE: NTS

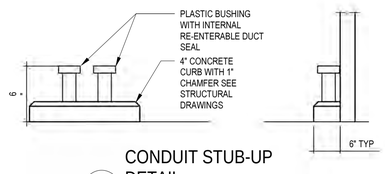

8 CONDUIT STUB-UP DETAIL
SCALE: NTS

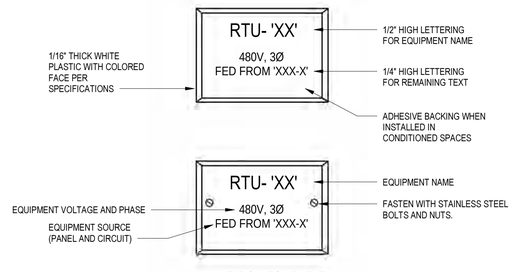

4 EQUIPMENT NAMEPLATE DETAIL
SCALE: NTS

LONG & ASSOCIATES
architects | engineers, inc.
4525 South Manhattan Avenue, Tampa, FL 33611-2305
T813.839.0506 F813.839.4616 AAC0010424 IB28 CGC1511025
www.longandassociates.com

THIS DOCUMENT IS COPYRIGHT PROTECTED. THE INTENT OF THIS DOCUMENT IS TO BE USED FOR THE CONSTRUCTION OF THE PROJECT SPECIFIED. ANY OTHER USE IS PROHIBITED WITHOUT THE CONSENT OF LONG & ASSOCIATES, INC. ALL RIGHTS RESERVED.

HILLSBOROUGH COUNTY SHERIFF'S OFFICE

PINEBROOK BUILDING 4 INTERIOR RENOVATION

1220 - 1238 TECH BLVD.
TAMPA, FL 33619

Seal

ROBERT A. RACE II, P.E.
PE 51483

No.	Date	Issues & Revisions

TO THE BEST OF THE ARCHITECT'S AND/OR ENGINEER'S KNOWLEDGE THESE PLANS AND SPECIFICATIONS COMPLY WITH THE APPLICABLE MINIMUM BUILDING CODES AND THE APPLICABLE FIRE-SAFETY STANDARDS

Phase: 100% CONSTRUCTION DRAWINGS
Drawn By: XG
Checked By: RAR
Job No: 19002
Date: SEPTEMBER 20, 2019
9/19/2019 4:48:47 PM

DETAILS

E7.2

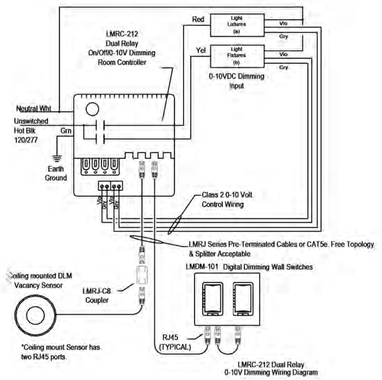

4 TWO SWITCH LEG SMALL ROOM LIGHTING CONTROL DIAGRAM
SCALE: NTS

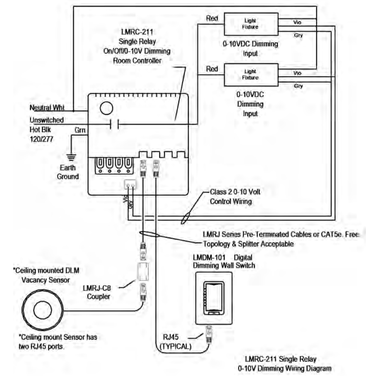

3 SMALL ROOM LIGHTING CONTROL DIAGRAM
SCALE: NTS

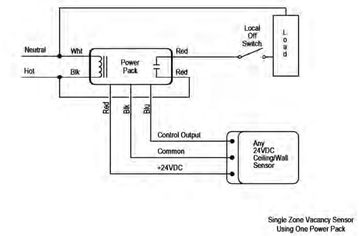

2 TOILET ROOM LIGHTING CONTROL DIAGRAM
SCALE: NTS

0-10V Dimming Room Controllers

LMRC-21x units use a 20A, 120/277V 50/60 Hz input circuit, have 4-Cat 5e DLM ports, an Input Circuit Current Monitor, and provide 250mA 24VDC to power DLM Cat 5e devices

ON/OFF Plug Load Controllers

LMPL-xxx units are UL Listed for Plug Load control. They control a 20A, 120V 60 Hz input circuit, have 3-Cat 5e DLM ports, and provide 150 or 250mA 24VDC to power DLM Cat 5e devices (Note LMCP relays are also Plug Load rated).

LMPL-201
Enhanced Plug Load
1 Circuit

Includes current monitor, provides 250mA of 24VDC power for DLM devices.

LMPL-101
Basic Plug Load
1 Circuit

Provides 150mA of 24VDC power for DLM devices (see 100 series rules)

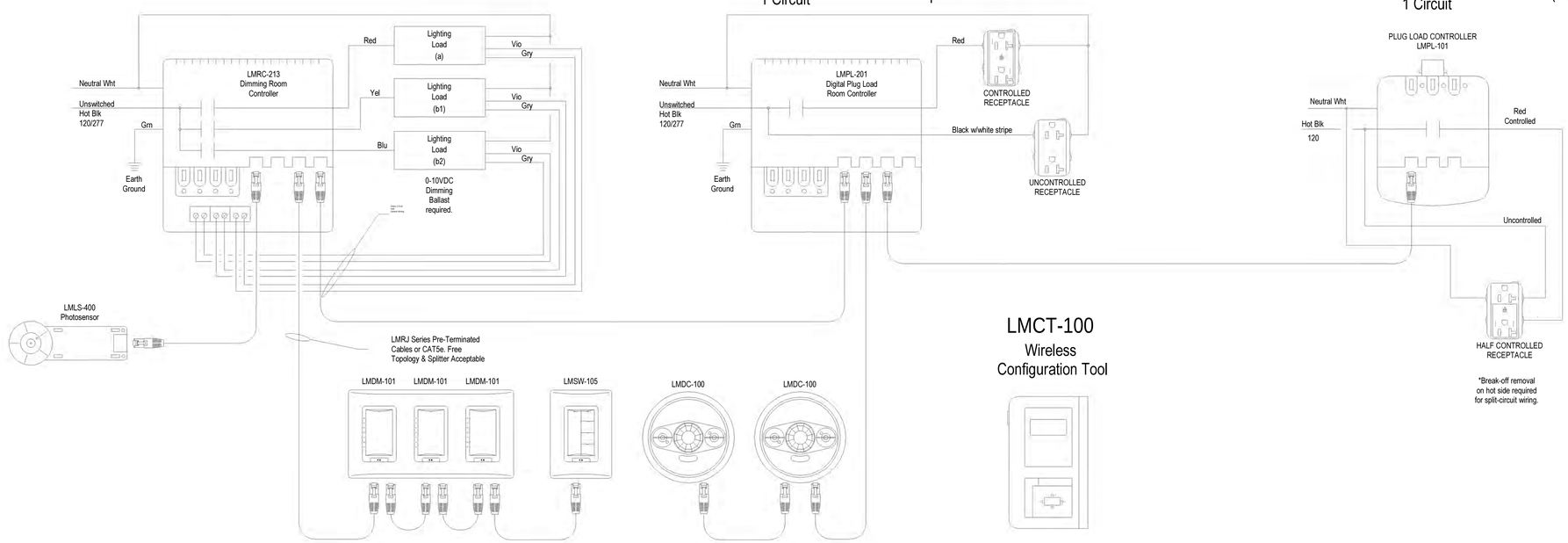

1 WS DLM PLUG LOAD OPTIONS
SCALE: NTS

LONG & ASSOCIATES
architects | engineers, inc.
4525 South Manhattan Avenue, Tampa, FL 33611-2305
T:813.839.0506 F:813.839.4616 AAC001624 I:828 CGC1511025
www.longandassociates.com

THIS DOCUMENT IS COPYRIGHTED & IS NOT TO BE USED, TRANSFERRED TO OTHERS OR REPRODUCED EXPRESS WRITTEN CONSENT OF LONG & ASSOCIATES INC. ARCHITECTS & ENGINEERS.

HILLSBOROUGH COUNTY SHERIFF'S OFFICE

PINEBROOK BUILDING 4 INTERIOR RENOVATION

1220 - 1238 TECH BLVD.
TAMPA, FL 33619

Seal

ROBERT A. RACE II, P.E.
PE 51483

No.	Date	Issues & Revisions

TO THE BEST OF THE ARCHITECT'S AND/OR ENGINEER'S KNOWLEDGE THESE PLANS AND SPECIFICATIONS COMPLY WITH THE APPLICABLE MINIMUM BUILDING CODES AND THE APPLICABLE FIRE-SAFETY STANDARDS

Phase: 100% CONSTRUCTION DRAWINGS
Drawn By: XG
Checked By: RAR
Job No: 19002
Date: SEPTEMBER 20, 2019
9/19/2019 4:48:49 PM

DETAILS

E7.3

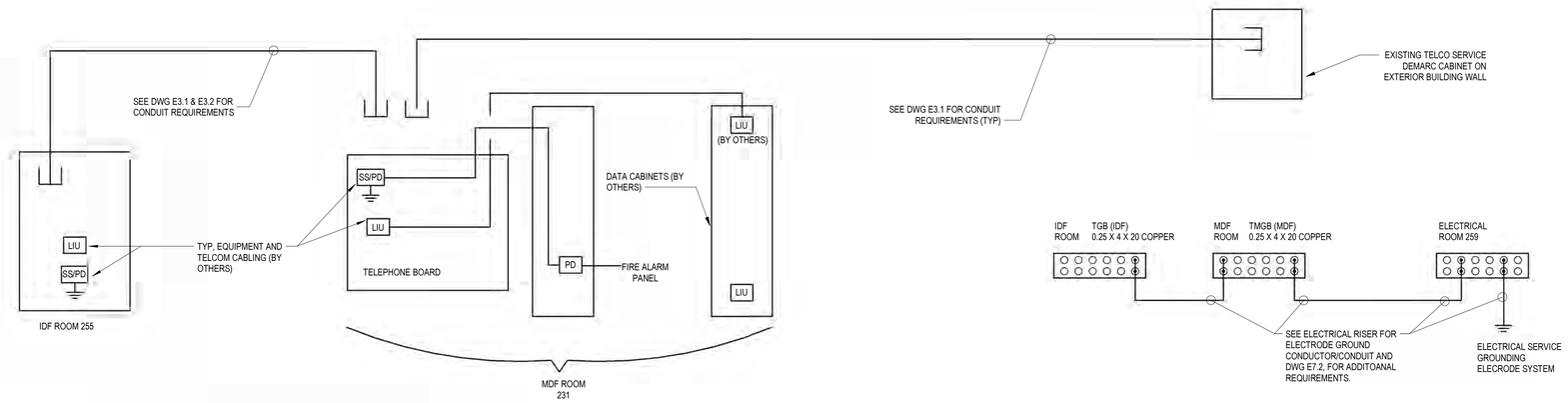

NOTE:
1. ALL RISERS ARE SHOWN FOR REFERENCE ONLY. CONFIRM QUANTITIES AND LOCATIONS WITH BUILDING PLANS AND SPECIFICATIONS.

3 TELECOMMUNICATIONS CONDUIT DISTRIBUTION SYSTEM RISER
SCALE: NTS

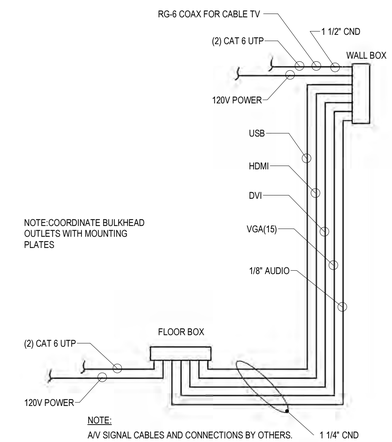

2 CONFERENCE ROOM A/V RISER
SCALE: NTS

ELECTRIC STRIKE

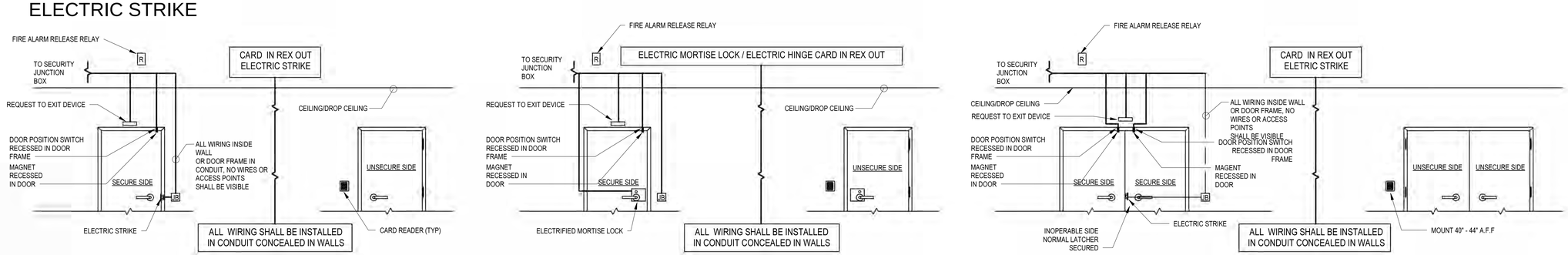

MAG LOCK

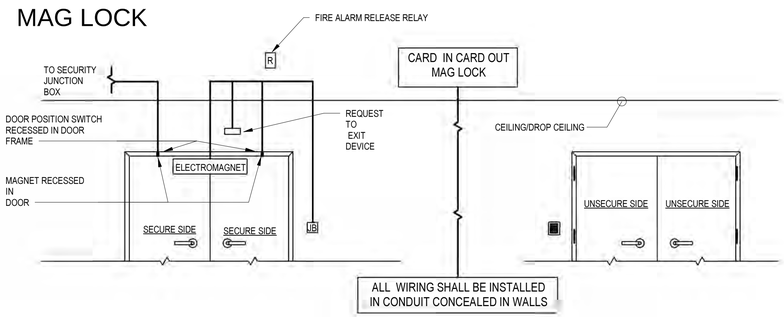

CRASH BAR

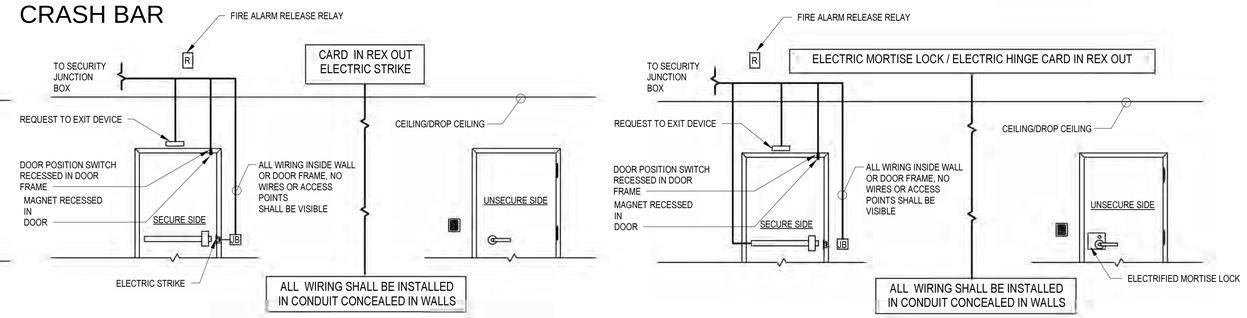

1 STANDARD SECURITY DOOR TYPE DETAILS
SCALE: NTS

NOTES
1. COORDINATE DOOR TYPES IN BUILDING WITH DOOR IDENTIFICATION NUMBERS SHOWN ON ARCHITECTURAL FLOOR PLAN DRAWINGS AND DOOR SCHEDULE ON ARCHITECTURAL DRAWINGS.
2. COORDINATE THIS DRAWING WITH ACCESS CONTROL/SECURITY SYSTEM DEVICES SHOWN ON POWER & SIGNAL PLANS.
3. RUN ALL CONDUITS FOR ACCESS CONTROL SYSTEMS CONCEALED IN WALL OR ABOVE CEILING. IN FINISH LOCATIONS VERIFY OUTLET LOCATIONS AND REQUIREMENTS WITH SECURITY/CARD ACCESS SYSTEM INSTALLER.
4. CONDUIT, OUTLET BOXES AND BLANK STAINLESS STEEL COVERPLATES SHALL BE PROVIDED BY ELECTRICAL CONTRACTOR .
5. ACS DEVICES AND WIRING BY OWNER'S ACS CONTRACTOR.

LONG & ASSOCIATES
architects | engineers, inc.
4525 South Manhattan Avenue, Tampa, FL 33611-2305
T:813.839.0206 F:813.839.4616 AAC0010424 IBPE CGC1511025
www.longandassociates.com

THIS DOCUMENT IS COPYRIGHTED IN THE STATE OF FLORIDA. THE PROPERTY OF LONG & ASSOCIATES. REPRODUCTION OR REPRESENTATION WITHOUT WRITTEN CONSENT OF LONG & ASSOCIATES IS PROHIBITED. ALL RIGHTS RESERVED.

HILLSBOROUGH COUNTY SHERIFF'S OFFICE

PINEBROOK BUILDING 4 INTERIOR RENOVATION

1220 - 1238 TECH BLVD.
TAMPA, FL 33619

Seal

ROBERT A. RACELI, P.E.
PE 51483

No.	Date	Issues & Revisions

TO THE BEST OF THE ARCHITECT'S AND/OR ENGINEER'S KNOWLEDGE THESE PLANS AND SPECIFICATIONS COMPLY WITH THE APPLICABLE MINIMUM BUILDING CODES AND THE APPLICABLE FIRE-SAFETY STANDARDS

Phase: 100% CONSTRUCTION DRAWINGS
Drawn By: XG
Checked By: RAR
Job No: 19002
Date: SEPTEMBER 20, 2019
9/19/2019 4:48:52 PM

DETAILS

E7.4

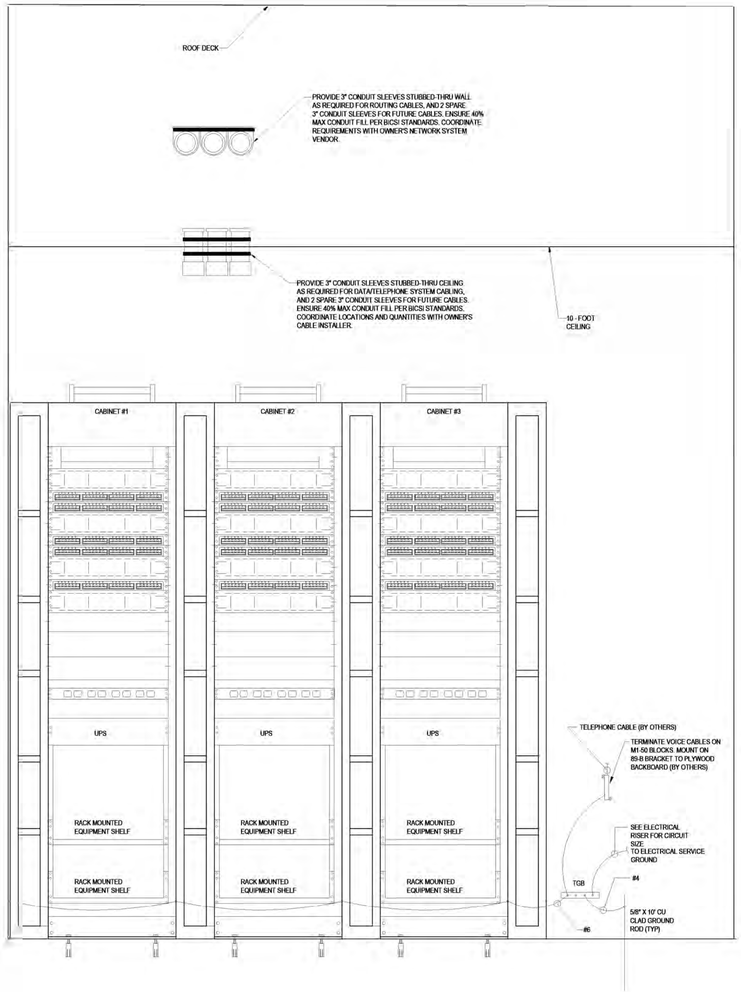

2 IDF ROOM SERVER CABINET ELEVATION (FOR REFERENCE ONLY)

SCALE: NTS

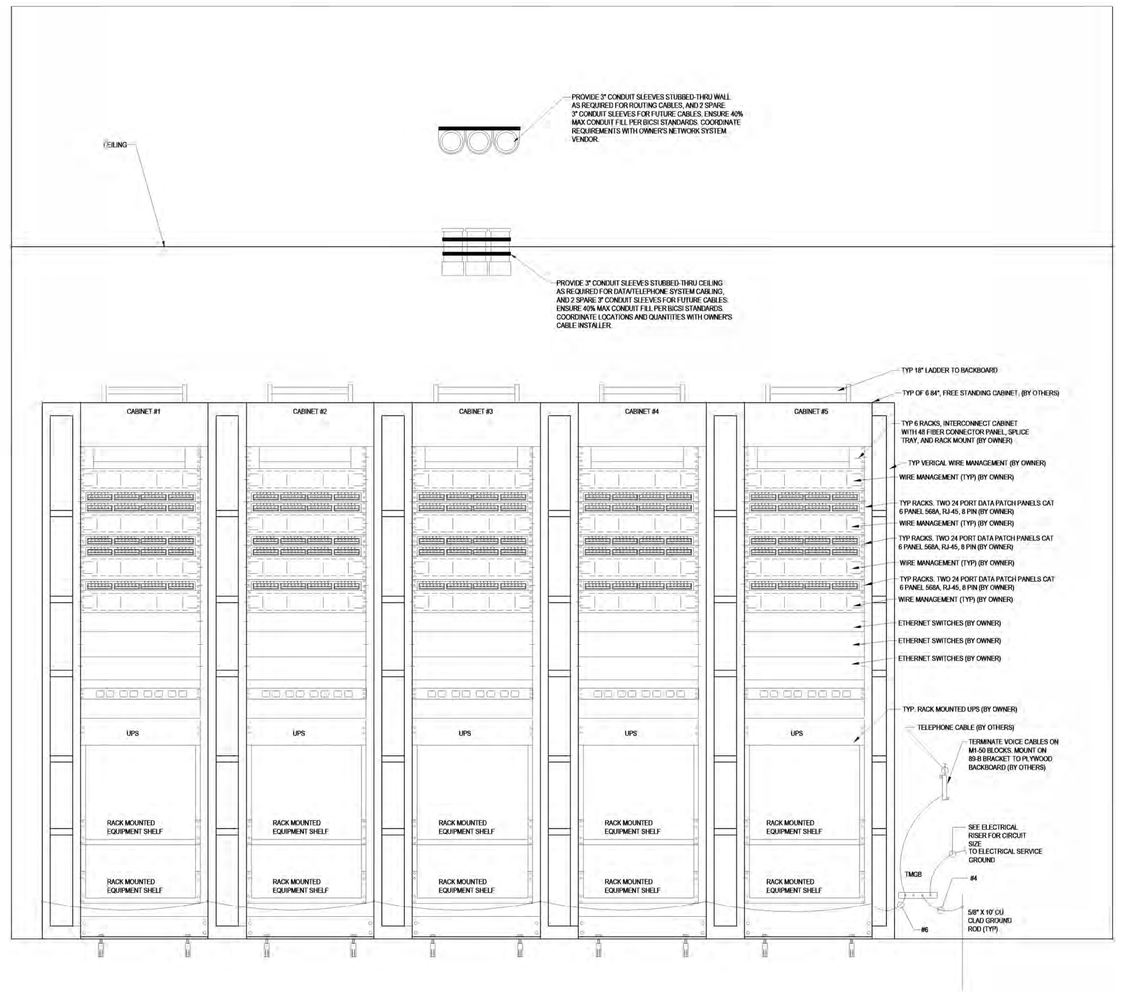

3 MDF ROOM SERVER CABINET ELEVATION (FOR REFERENCE ONLY)

SCALE: NTS

LONG & ASSOCIATES
architects | engineers, inc.
4525 South Manhattan Avenue, Tampa, FL 33611-2305
T:813.839.0506 F:813.839.4616 AAC001624 IB28 CGC1511025
www.longandassociates.com

THIS DOCUMENT IS COPYRIGHTED IN A MATTER CLOSE. OWNERSHIP IS RETAINED BY THE ARCHITECT
REPRODUCTIONS WITHOUT WRITTEN CONSENT OF LONG & ASSOCIATES PROHIBITED. ALL RIGHTS RESERVED

HILLSBOROUGH COUNTY SHERIFF'S OFFICE

PINEBROOK BUILDING 4 INTERIOR RENOVATION

1220 - 1238 TECH BLVD.
TAMPA, FL 33619

Seal

ROBERT A. RACE II, P.E.
PE 51483

No.	Date	Issues & Revisions

TO THE BEST OF THE ARCHITECT'S AND/OR ENGINEER'S KNOWLEDGE THESE PLANS AND SPECIFICATIONS COMPLY WITH THE APPLICABLE MINIMUM BUILDING CODES AND THE APPLICABLE FIRE-SAFETY STANDARDS

Phase: 100% CONSTRUCTION DRAWINGS
Drawn By: XG
Checked By: RAR
Job No: 19002
Date: SEPTEMBER 20, 2019
9/19/2019 4:48:55 PM

DETAILS

E7.5